US009409677B2

(12) **United States Patent**
Sudakoff

(10) **Patent No.: US 9,409,677 B2**
(45) **Date of Patent: *Aug. 9, 2016**

(54) **COLLAPSIBLE FOOD CONTAINER**

(71) Applicant: **Wilshire Industries, LLC**, San Clemente, CA (US)

(72) Inventor: **Daniel A. Sudakoff**, San Clemente, CA (US)

(73) Assignee: **Wilshire Industries, LLC**, San Clemente, CA (US)

(*) Notice: Subject to any disclaimer, the term of this patent is extended or adjusted under 35 U.S.C. 154(b) by 0 days.

This patent is subject to a terminal disclaimer.

(21) Appl. No.: **14/798,329**

(22) Filed: **Jul. 13, 2015**

(65) **Prior Publication Data**

US 2015/0314914 A1 Nov. 5, 2015

Related U.S. Application Data

(63) Continuation of application No. 13/601,783, filed on Aug. 31, 2012, now Pat. No. 9,079,685.

(51) **Int. Cl.**

B65D 21/08	(2006.01)
B65D 43/02	(2006.01)
B65D 51/16	(2006.01)

(52) **U.S. Cl.**

CPC ***B65D 21/086*** (2013.01); ***B65D 43/0218*** (2013.01); ***B65D 51/1683*** (2013.01); *B65D 2543/00092* (2013.01); *B65D 2543/0099* (2013.01); *B65D 2543/00101* (2013.01)

(58) **Field of Classification Search**

CPC B65D 2251/0093; B65D 21/086
USPC 220/200, 666, 367.1
See application file for complete search history.

(56) **References Cited**

U.S. PATENT DOCUMENTS

5,417,337	A	5/1995	Robbins, III
5,575,398	A	11/1996	Robbins, III
5,900,293	A	5/1999	Zettle
6,315,151	B1	11/2001	Hupp et al.
7,678,271	B2	3/2010	Curtin
2006/0096929	A1	5/2006	Repp et al.
2008/0099476	A1	5/2008	Fung
2011/0311688	A1	12/2011	Becraft et al.

FOREIGN PATENT DOCUMENTS

JP	10-511912	11/1998

OTHER PUBLICATIONS

PCT International Search Report, PCT/US2013/057026, dated Dec. 6, 2013, 3 pages.
PCT Written Opinion of the International Searching Authority, PCT/US2013/057026, dated Dec. 6, 2013, 8 pages.

(Continued)

Primary Examiner — Anthony Stashick
Assistant Examiner — Raven Collins
(74) *Attorney, Agent, or Firm* — Snell & Wilmer LLP

(57) **ABSTRACT**

The present specification discloses a collapsible food container. The container includes a wall portion with an outer surface having a substantially smooth shape. The wall portion is configured to bend from raised position to a collapsed position, with the food container being used to retain food in the raised position and being collapsed for storage in the collapsed position.
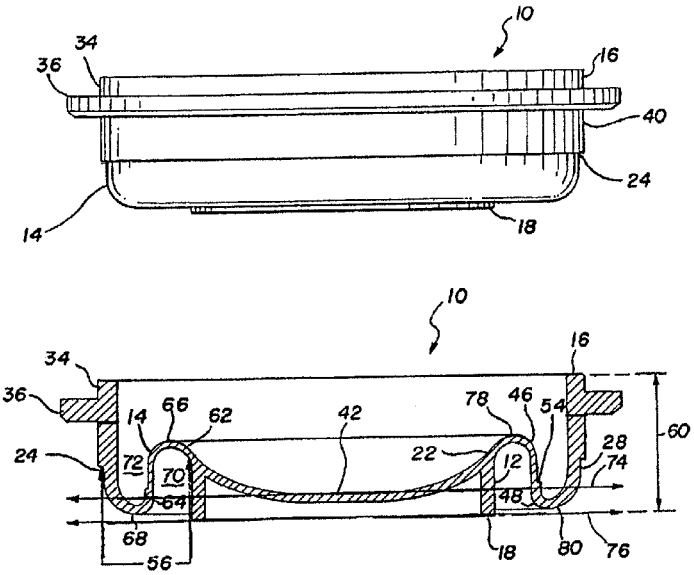
20 Claims, 11 Drawing Sheets