US009409277B2

(12) **United States Patent**
Umemoto et al.

(10) **Patent No.: US 9,409,277 B2**
(45) **Date of Patent: Aug. 9, 2016**

(54) **POLISHING APPARATUS AND POLISHING METHOD**

(71) Applicant: **EBARA CORPORATION**, Tokyo (JP)

(72) Inventors: **Masao Umemoto**, Tokyo (JP); **Tadakazu Sone**, Tokyo (JP); **Hideo Aizawa**, Tokyo (JP); **Ryuichi Kosuge**, Tokyo (JP); **Masaaki Eriguchi**, Tokyo (JP)

(73) Assignee: **Ebara Corporation**, Tokyo (JP)

(*) Notice: Subject to any disclaimer, the term of this patent is extended or adjusted under 35 U.S.C. 154(b) by 366 days.

(21) Appl. No.: **14/067,723**

(22) Filed: **Oct. 30, 2013**

(65) **Prior Publication Data**

US 2014/0162536 A1 Jun. 12, 2014

(30) **Foreign Application Priority Data**

Oct. 31, 2012 (JP) 2012-240394
Nov. 2, 2012 (JP) 2012-242951

(51) **Int. Cl.**
B24B 53/017 (2012.01)
B24B 37/04 (2012.01)

(52) **U.S. Cl.**
CPC ***B24B 53/017*** (2013.01); ***B24B 37/04*** (2013.01)

(58) **Field of Classification Search**
CPC .. B24B 53/007; B24B 53/0095; B24B 55/02; B24B 55/03; B24B 55/12; B24B 55/045; B23D 59/02; B23D 59/025; B23D 59/04
USPC 451/56, 72, 443, 444, 450, 451, 488; 222/108
See application file for complete search history.

(56) **References Cited**

U.S. PATENT DOCUMENTS

5,839,947 A * 11/1998 Kimura B24B 53/017 451/287
6,280,299 B1 8/2001 Kennedy et al.
6,283,840 B1 * 9/2001 Huey B24B 57/02 451/288
6,358,124 B1 * 3/2002 Koga B08B 1/007 451/444
6,609,962 B1 * 8/2003 Wakabayashi B24B 1/04 451/443
7,753,761 B2 * 7/2010 Fujita B24B 37/04 451/443
2002/0164932 A1 * 11/2002 Kamimura B24B 29/005 451/56
2003/0143933 A1 * 7/2003 Baek B24B 55/02 451/67
2003/0143937 A1 * 7/2003 Peng B24B 37/34 451/490
2009/0067959 A1 * 3/2009 Takahashi B24B 37/345 414/226.01
2009/0305612 A1 12/2009 Miyazaki et al.

(Continued)

FOREIGN PATENT DOCUMENTS

JP 2003-133277 A 5/2003
JP 2007-168039 A 7/2007

(Continued)

Primary Examiner — Monica Carter
Assistant Examiner — Marcel Dion
(74) *Attorney, Agent, or Firm* — Baker & Hostetler LLP

(57) **ABSTRACT**

A polishing apparatus includes: a rotatable polishing table for supporting a polishing pad having a polishing surface; a top ring head having a top ring; a top ring head cover surrounding the top ring head; a dresser head having a dresser configured to dress the polishing surface; a dresser head cover surrounding the dresser head; a spray nozzle configured to spray a cleaning liquid onto an upper surface of the top ring and an outer surface of the top ring head cover when the top ring is in the substrate transfer position; and a spray nozzle configured to spray a cleaning liquid onto an outer surface of the dresser head cover when the dresser is in the retreated position.
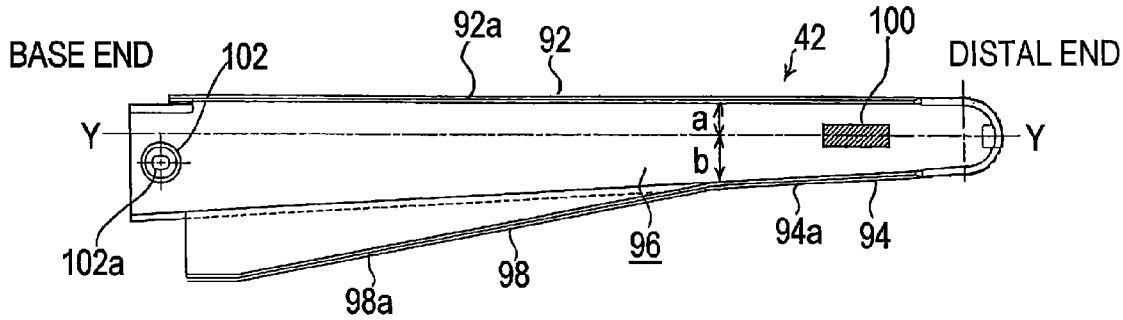
6 Claims, 13 Drawing Sheets