US009409077B2

(12) **United States Patent**
Raniere

(10) **Patent No.: US 9,409,077 B2**
(45) **Date of Patent: *Aug. 9, 2016**

(54) **METHOD AND APPARATUS FOR IMPROVING PERFORMANCE**

(75) Inventor: **Keith A. Raniere**, Clifton Park, NY (US)

(73) Assignee: **FIRST PRINCIPLES, INC.**, Albany, NY (US)

(*) Notice: Subject to any disclaimer, the term of this patent is extended or adjusted under 35 U.S.C. 154(b) by 247 days.

This patent is subject to a terminal disclaimer.

(21) Appl. No.: **11/456,976**

(22) Filed: **Jul. 12, 2006**

(65) **Prior Publication Data**

US 2006/0247098 A1 Nov. 2, 2006

Related U.S. Application Data

(62) Division of application No. 10/631,279, filed on Jul. 31, 2003.

(51) **Int. Cl.**

A63B 71/06	(2006.01)
A63B 24/00	(2006.01)
G09B 19/00	(2006.01)
A63B 23/18	(2006.01)
A61B 5/22	(2006.01)
A63B 21/06	(2006.01)
A63B 22/02	(2006.01)

(52) **U.S. Cl.**

CPC ***A63B 71/0619*** (2013.01); ***A63B 24/0062*** (2013.01); ***G09B 19/0038*** (2013.01); *A61B 5/222* (2013.01); *A63B 21/06* (2013.01); *A63B 22/02* (2013.01); *A63B 23/18* (2013.01); *A63B 2024/0068* (2013.01); *A63B 2024/0078* (2013.01); *A63B 2071/068* (2013.01); *A63B 2220/30* (2013.01); *A63B 2220/803* (2013.01); *A63B 2225/20* (2013.01); *A63B 2225/50* (2013.01); *A63B 2230/00* (2013.01); *A63B 2230/06* (2013.01); *A63B 2230/30* (2013.01)

(58) **Field of Classification Search**

USPC 482/1, 8, 7, 5, 900; 434/247, 254, 255

See application file for complete search history.

(56) **References Cited**

U.S. PATENT DOCUMENTS

4,408,183	A *	10/1983	Wills	340/323 R
4,463,764	A *	8/1984	Anderson et al.	600/532
4,542,897	A	9/1985	Melton et al.	
4,828,257	A *	5/1989	Dyer et al.	482/5
5,001,632	A *	3/1991	Hall-Tipping	463/7

(Continued)

FOREIGN PATENT DOCUMENTS

AU	2004262334	5/2011
CN	1176833 A	3/1998

(Continued)

OTHER PUBLICATIONS

Stratton et al. "Cardiovasular responses to exercise Effects of aging and exercise training in healthy men." Amercian Heart Association 1994 p. 1648-1655.*

(Continued)

Primary Examiner — Robert J Utama

(74) *Attorney, Agent, or Firm* — Schmeiser, Olsen & Watts, LLP

(57) **ABSTRACT**

The present invention relates generally to a training method and apparatus for improving performance.
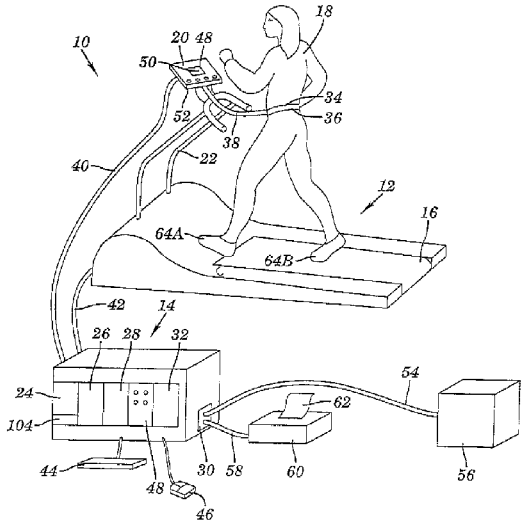
3 Claims, 6 Drawing Sheets