US009408377B2

(12) **United States Patent**
Hyun

(10) **Patent No.: US 9,408,377 B2**
(45) **Date of Patent: Aug. 9, 2016**

(54) **FISHING REEL HAVING DRAG ASSEMBLY**

(71) Applicant: **DOYO ENGINEERING CO., LTD**, Bucheon (KR)

(72) Inventor: **Kang-Ho Hyun**, Bucheon (KR)

(73) Assignee: **DOYO ENGINEERING CO., LTD.** (KR)

(*) Notice: Subject to any disclaimer, the term of this patent is extended or adjusted under 35 U.S.C. 154(b) by 0 days.

(21) Appl. No.: **14/601,530**

(22) Filed: **Jan. 21, 2015**

(65) **Prior Publication Data**

US 2015/0208632 A1 Jul. 30, 2015

(30) **Foreign Application Priority Data**

Jan. 28, 2014 (KR) 10-2014-0010480

(51) **Int. Cl.**
A01K 89/01 (2006.01)
A01K 89/033 (2006.01)

(52) **U.S. Cl.**
CPC ***A01K 89/033*** (2013.01); ***A01K 89/053*** (2015.05)

(58) **Field of Classification Search**
CPC ... A01K 89/015; A01K 89/033; A01K 89/05; A01K 89/057; A01K 89/058
See application file for complete search history.

(56) **References Cited**

U.S. PATENT DOCUMENTS

2,569,006 A * 9/1951 King A01K 89/015 192/70.23
2,760,357 A * 8/1956 Burns A01K 89/015 242/260
4,482,105 A * 11/1984 Noda A01K 89/015 242/268
4,585,188 A * 4/1986 Sato A01K 89/01555 242/261
4,648,566 A * 3/1987 Furomoto A01K 89/015 192/48.5
5,996,918 A * 12/1999 Nanbu A01K 89/033 242/267
6,047,913 A * 4/2000 Yamaguchi A01K 89/015 242/310
2001/0038052 A1* 11/2001 Oishi A01K 89/015 242/255
2012/0018562 A1* 1/2012 Takamatsu A01K 89/015 242/307
2013/0181081 A1* 7/2013 Niitsuma A01K 89/0155 242/289
2013/0200194 A1* 8/2013 Lawson A01K 89/033 242/268
2013/0220050 A1* 8/2013 Koike A01K 89/00 74/439
2015/0129701 A1* 5/2015 Takechi A01K 89/033 242/268

FOREIGN PATENT DOCUMENTS

KR 1020110101379 9/2011

* cited by examiner

Primary Examiner — Emmanuel M Marcelo
(74) *Attorney, Agent, or Firm* — Cantor Colburn LLP

(57) **ABSTRACT**

A fishing reel having a drag assembly. The drag assembly brakes the unwinding rotation of a spool to prevent a fishing line from being excessively rapidly unwound from the spool and thus from being snapped when the fishing line is drawn out by a hooked fish. The drag assembly includes a washer retainer coupled to a drive gear, and a washer group having a brake washer. Therefore, there is no need for the drive gear to have a shape corresponding to the washer group, whereby the manufacturing process can be facilitated, the time it takes to manufacture the fishing reel can be reduced, and the production cost can also be reduced.
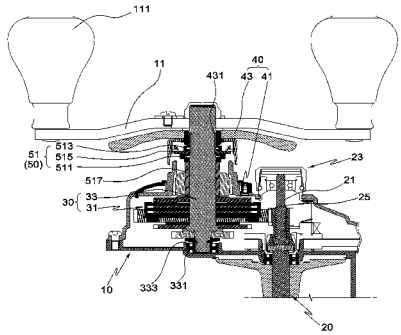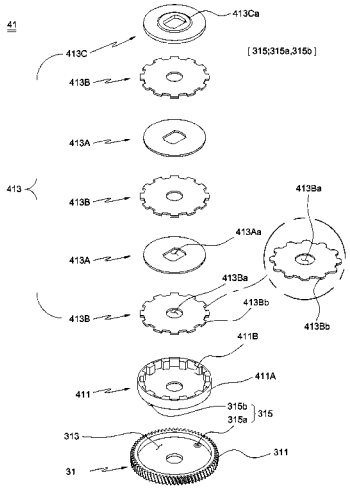
2 Claims, 6 Drawing Sheets