March 31, 1970 W. J. BERRY 3,503,877

DIALYZER AGITATOR

Filed April 9, 1965 2 Sheets-Sheet 1

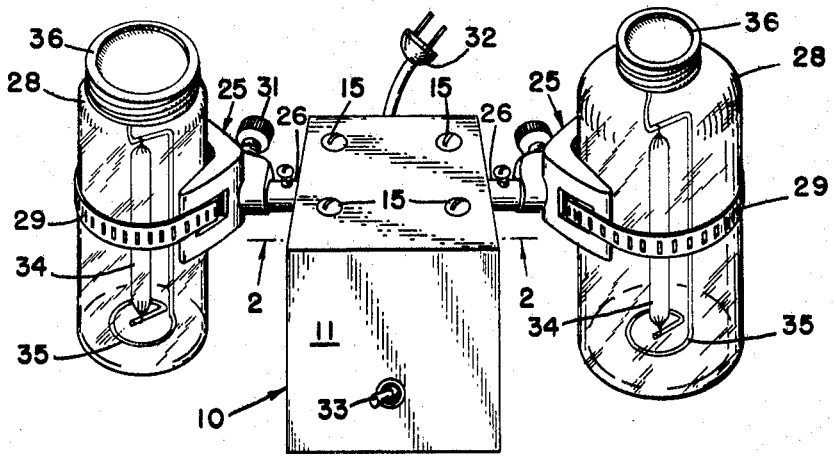

FIG. 1

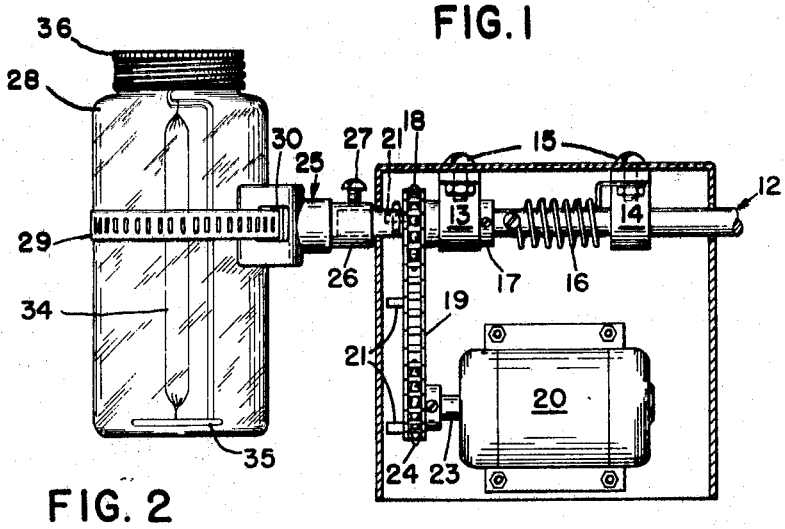

FIG. 2

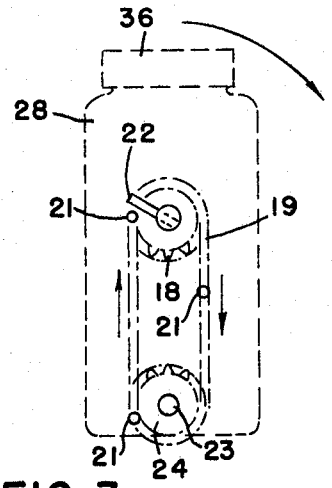

FIG. 3

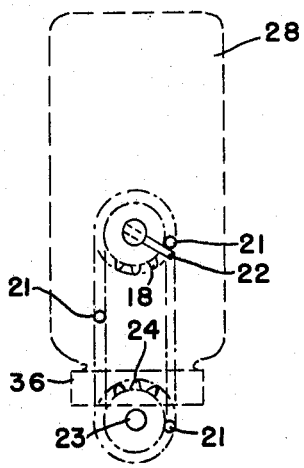

FIG. 4

INVENTOR.
WILLIAM J. BERRY

BY David Rabin