US005695776A

United States Patent [19]

Ballard et al.

[11] Patent Number: 5,695,776

[45] Date of Patent: Dec. 9, 1997

[54] TERMITE BAIT APPARATUS HAVING GROOVES

[75] Inventors: **James Bruce Ballard**, Medford, N.J.; **Sherman H. Trimm**, Langhorne, Pa.

[73] Assignee: **FMC Corporation**, Chicago, Ill.

[21] Appl. No.: **614,422**

[22] Filed: **Mar. 12, 1996**

[51] **Int. Cl.**[6] **A01N 25/08**

[52] **U.S. Cl.** **424/408**; 424/409; 424/405

[58] **Field of Search** 424/405, 409, 424/408

[56] **References Cited**

U.S. PATENT DOCUMENTS

4,363,798 12/1982 D'Orazio 424/84
5,329,726 7/1994 Thorne et al. 43/124

Primary Examiner—Thurman K. Page
Assistant Examiner—Kathryne E. Shelborne
Attorney, Agent, or Firm—Michael B.K. Lee; Douglas W. Rudy; I. Robert Silverman

[57] **ABSTRACT**

The invention provides a method and apparatus for controlling termites. The invention provides a more attractive and durable termite bait by providing a thin flat block of wood with grooves and impregnating the surface of the wood with a slow acting toxicant.
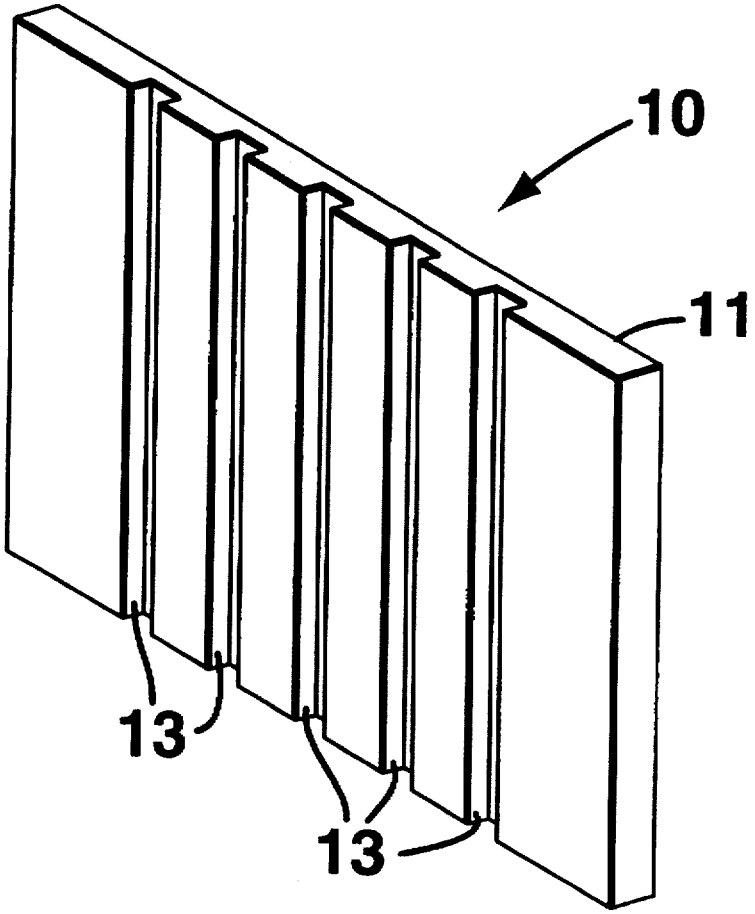
18 Claims, 3 Drawing Sheets