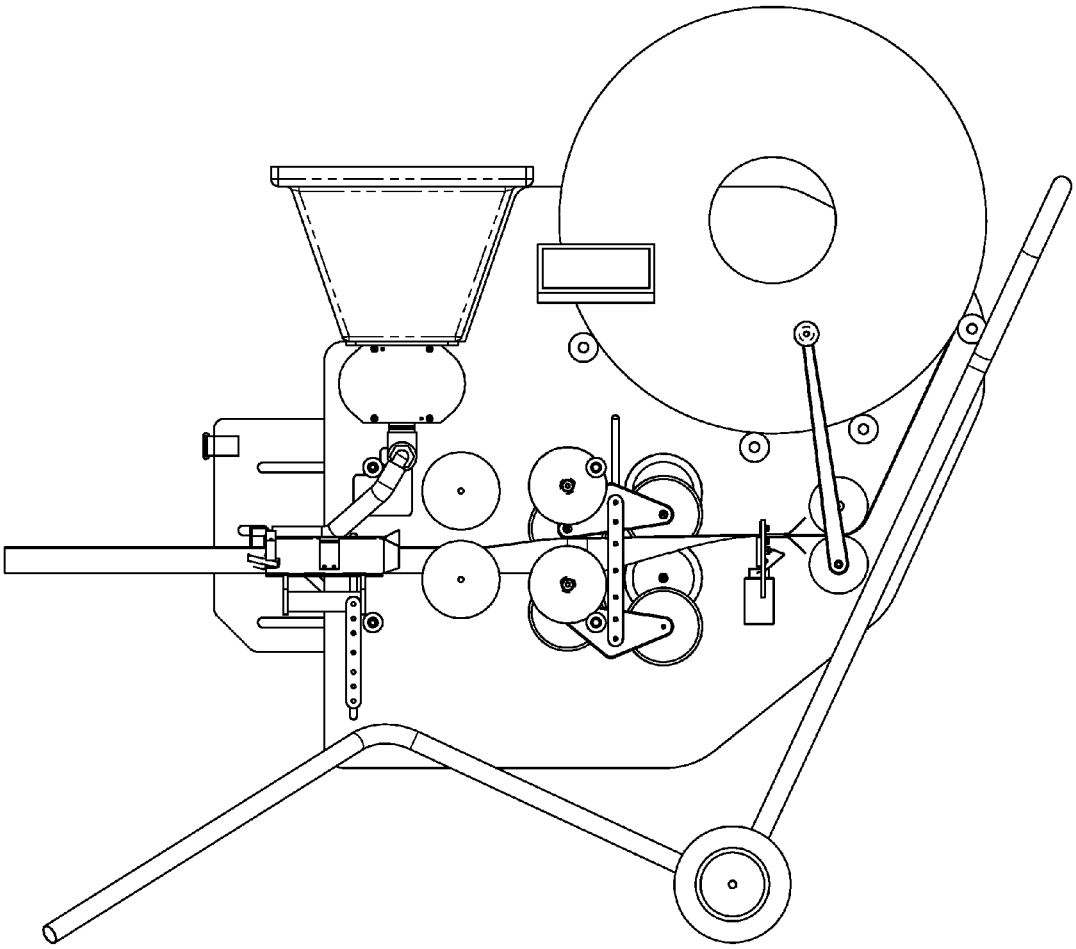

FUGURE 4