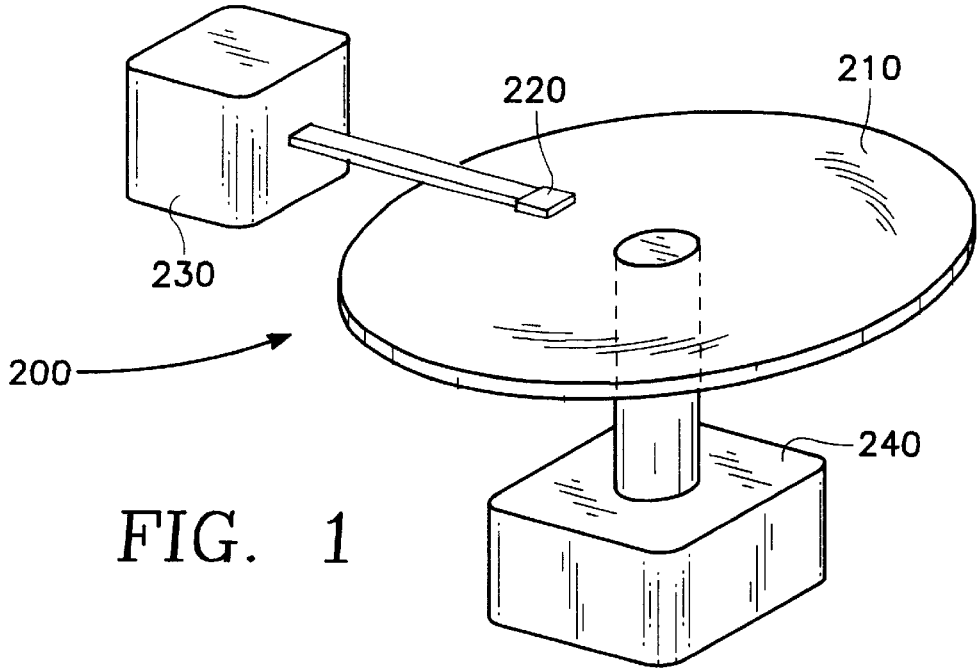
220
210
230
200
240

FIG. 1

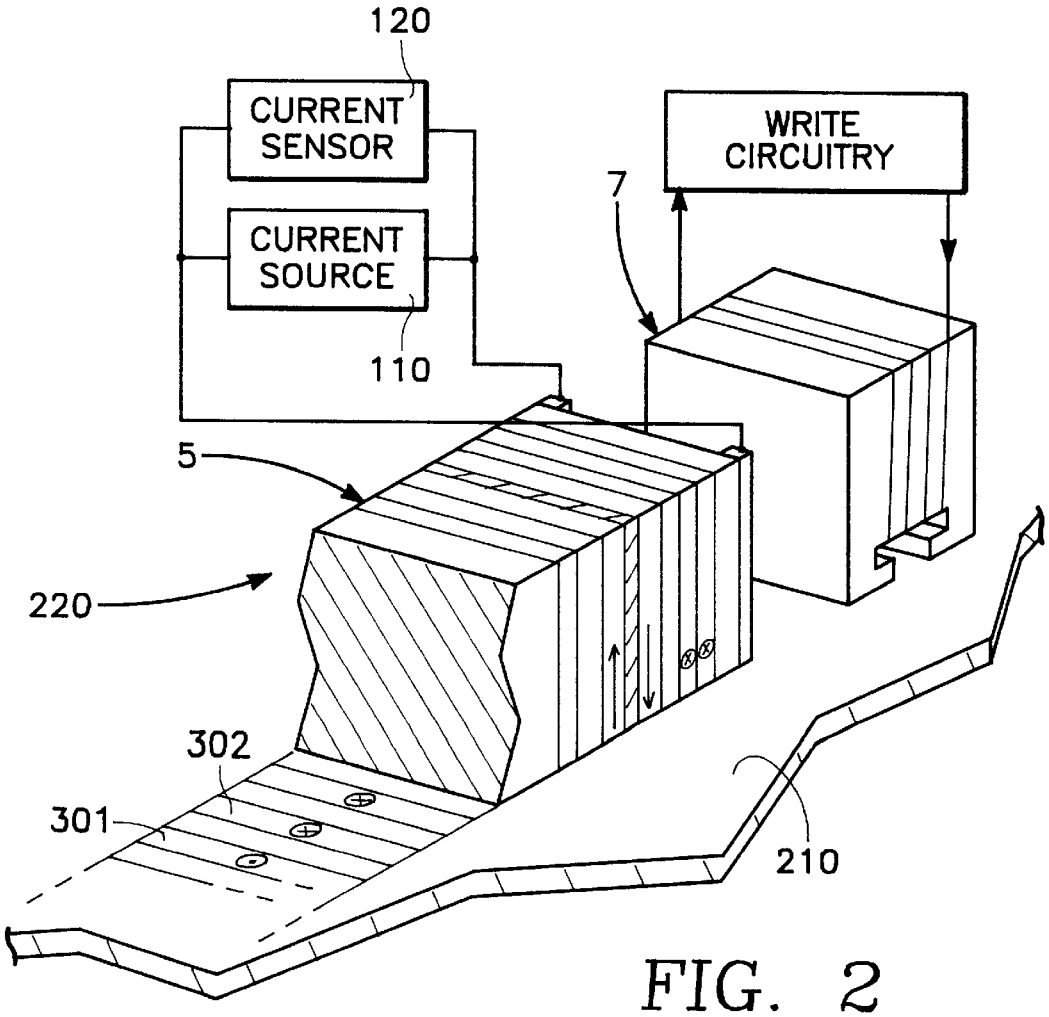
120
CURRENT SENSOR
CURRENT SOURCE
110
WRITE CIRCUITRY
7
5
220
302
301
210

FIG. 2