March 14, 1961

W. HAHN

ARRANGEMENT FOR THE SETTING OF THE APERTURE OF A LENS OF A CAMERA

Filed June 19, 1956

2,974,576

Fig. 1.

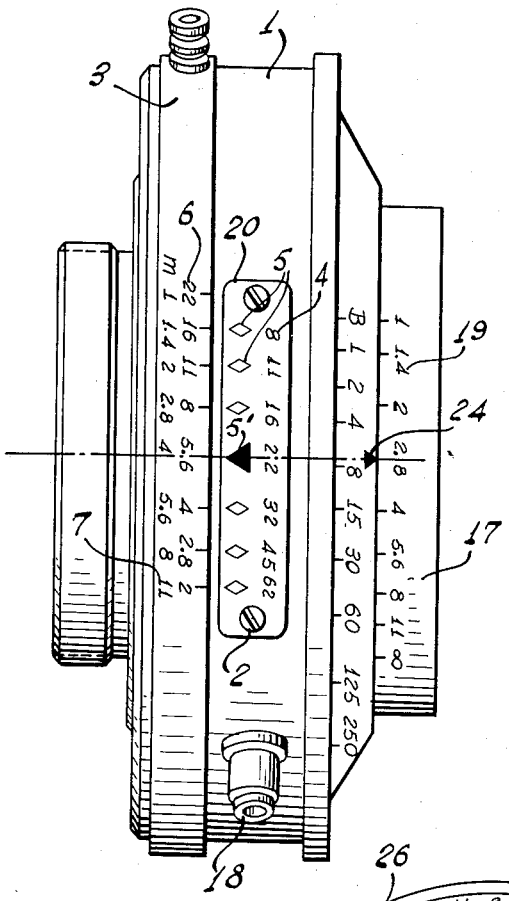

Fig. 2.

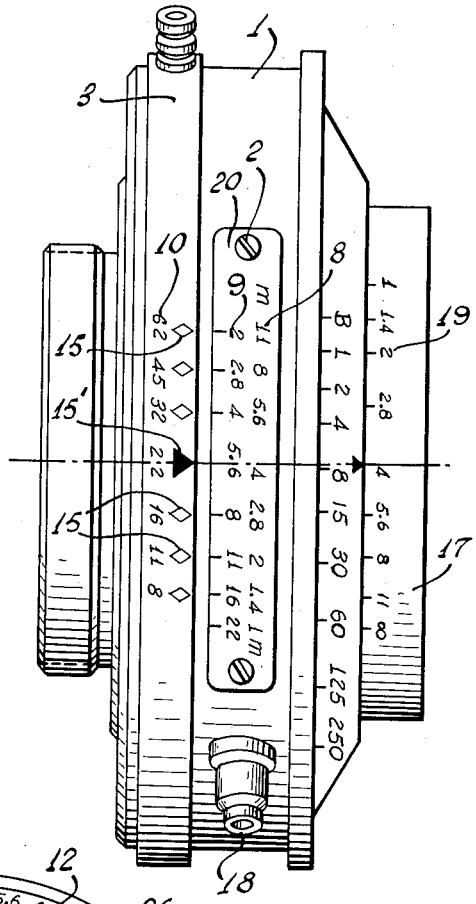

Fig. 3.

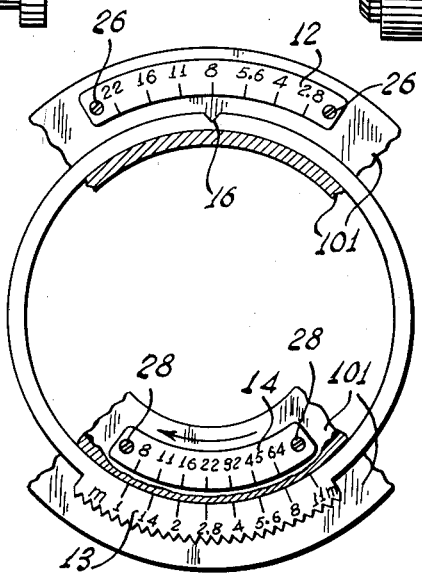

INVENTOR

Werner Hahn