March 22, 1966 N. H. VOGT 3,241,476

BRINE INJECTING NEEDLE ASSEMBLY

Filed Sept. 17, 1963

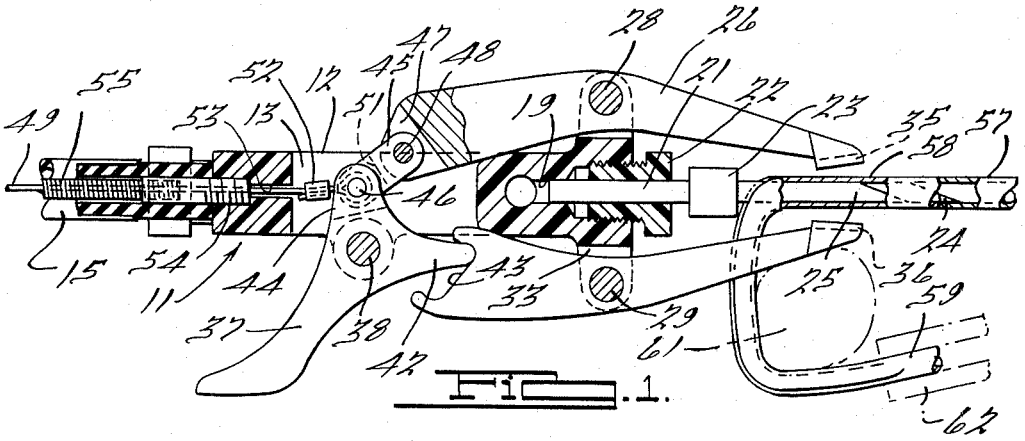

FIG. 1.

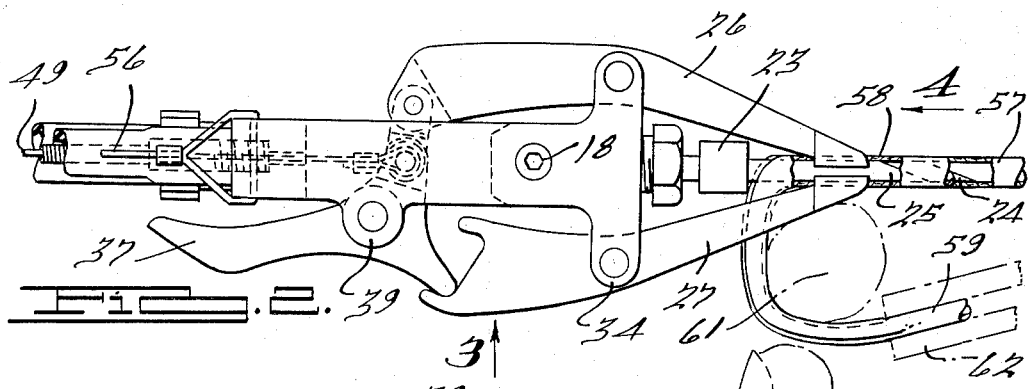

FIG. 2.

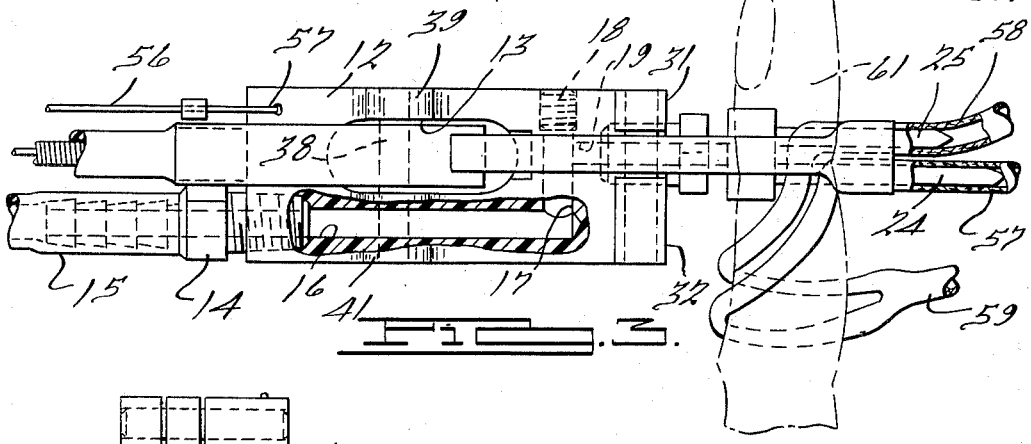

FIG. 3.

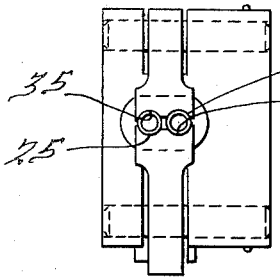

FIG. 4.

INVENTOR.
Norman H. Vogt.
BY
Harness, Dickey & Pierce.
ATTORNEYS.