US009636876B2

(12) **United States Patent**
Lee et al.

(10) **Patent No.: US 9,636,876 B2**
(45) **Date of Patent: May 2, 2017**

(54) **METHOD, DEVICE AND APPARATUS FOR VACUUM FORMING COMPOSITE LAMINATES**

(71) Applicant: **The Boeing Company**, Chicago, IL (US)

(72) Inventors: **Byungwoo Lee**, Kirkland, WA (US); **Andrew Elmer Modin**, Charleston, SC (US); **James Christopher Elm**, Mukilteo, WA (US)

(73) Assignee: **THE BOEING COMPANY**, Chicago, IL (US)

(*) Notice: Subject to any disclaimer, the term of this patent is extended or adjusted under 35 U.S.C. 154(b) by 267 days.

(21) Appl. No.: **14/527,162**

(22) Filed: **Oct. 29, 2014**

(65) **Prior Publication Data**

US 2016/0121560 A1 May 5, 2016

(51) **Int. Cl.**

B29C 70/44	(2006.01)
B29C 70/34	(2006.01)
B29D 99/00	(2010.01)
B29K 105/08	(2006.01)
B29K 307/04	(2006.01)
B29L 31/30	(2006.01)

(52) **U.S. Cl.**

CPC ***B29C 70/443*** (2013.01); ***B29C 70/342*** (2013.01); ***B29C 70/446*** (2013.01); ***B29D 99/0003*** (2013.01); *B29K 2105/0872* (2013.01); *B29K 2307/04* (2013.01); *B29L 2031/3082* (2013.01)

(58) **Field of Classification Search**

CPC ... B29C 70/443; B29C 70/342; B29C 70/446; B29D 99/0003; B29L 2031/3082

See application file for complete search history.

(56) **References Cited**

U.S. PATENT DOCUMENTS

5,648,109	A	7/1997	Gutowski et al.	
5,772,950	A	6/1998	Brustad et al.	
6,406,580	B1	6/2002	Campbell, Jr.	
7,534,387	B2	5/2009	Zenkner et al.	
7,622,066	B2 *	11/2009	Brustad	B29C 70/44 264/257
8,142,181	B2	3/2012	Willden et al.	
8,551,380	B2	10/2013	Hawkins et al.	
8,556,618	B2	10/2013	Bergmann	
2010/0102482	A1	4/2010	Jones et al.	
2014/0103585	A1	4/2014	Coxon et al.	
2014/0190625	A1	7/2014	Buttrick et al.	

FOREIGN PATENT DOCUMENTS

EP	1243401	A1	9/2002
EP	2662203	A2	11/2013

OTHER PUBLICATIONS

Extended European Search Report, dated Mar. 15, 2016, regarding Application No. EP15188221.4, 8 pages.

Modin et al., "Method and Apparatus for Forming Contoured Composite Laminates," U.S. Appl. No. 14/279,725, filed May 16, 2014, 68 pages.

* cited by examiner

Primary Examiner — Robert B Davis

(74) *Attorney, Agent, or Firm* — Yee & Associates, P.C.

(57) **ABSTRACT**

Composite prepreg plies are formed and compacted on a contoured tool by a compliant former device using compaction force applied by a vacuum diaphragm. The former device is configured to first clamp and then sweep the plies over features of the tool in a desired sequence.
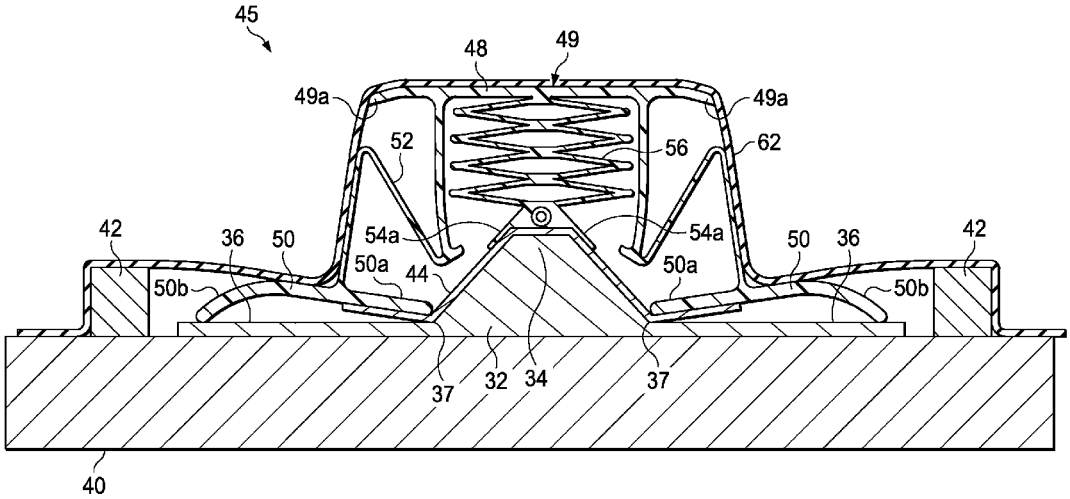
20 Claims, 14 Drawing Sheets