US009924976B2

(12) **United States Patent**
Simpson et al.

(10) **Patent No.: US 9,924,976 B2**
(45) **Date of Patent: Mar. 27, 2018**

(54) **SPINAL IMPLANT SYSTEM AND METHOD**

(71) Applicant: **Warsaw Orthopedic, Inc.**, Warsaw, IN (US)

(72) Inventors: **Joshua W. Simpson**, Collierville, TN (US); **Gary S. Lindemann**, Collierville, TN (US); **Jason M. May**, Collierville, TN (US); **Maria-Rosa Padilla**, Nesbit, MS (US)

(73) Assignee: **Warsaw Orthopedic, Inc.**, Warsaw, IN (US)

(*) Notice: Subject to any disclaimer, the term of this patent is extended or adjusted under 35 U.S.C. 154(b) by 146 days.

(21) Appl. No.: **14/864,482**

(22) Filed: **Sep. 24, 2015**

(65) **Prior Publication Data**

US 2017/0086888 A1 Mar. 30, 2017

(51) **Int. Cl.**
A61B 17/70 (2006.01)

(52) **U.S. Cl.**
CPC ***A61B 17/7053*** (2013.01)

(58) **Field of Classification Search**
CPC A61B 17/7053
See application file for complete search history.

(56) **References Cited**

U.S. PATENT DOCUMENTS

5,356,412 A * 10/1994 Golds A61B 17/1327 24/170
6,277,120 B1 8/2001 Lawson
7,166,108 B2 1/2007 Mazda et al.
7,481,828 B2 1/2009 Mazda et al.
7,959,654 B2 6/2011 Mazda et al.
8,128,635 B2 * 3/2012 Belliard A61B 17/7053 606/103
8,162,946 B2 4/2012 Baccelli et al.
8,172,843 B2 5/2012 Baccelli et al.
8,870,870 B2 10/2014 Baccelli et al.
8,926,668 B2 1/2015 Douget
8,936,625 B2 1/2015 Larroque-Lahitette et al.
9,039,708 B2 * 5/2015 Larroque-Lahitette A61B 17/7001 606/74
2005/0131404 A1 6/2005 Mazda et al.
2010/0249845 A1 9/2010 Meunier et al.
2011/0112581 A1 * 5/2011 Clement A61B 17/7053 606/264
2011/0301644 A1 12/2011 Belliard
2012/0130373 A1 * 5/2012 Larroque-Lahitette A61B 17/7001 606/74
2012/0150232 A1 * 6/2012 Van Nortwick ... A61B 17/7001 606/264

(Continued)

FOREIGN PATENT DOCUMENTS

EP 1926444 A1 6/2008
EP 2052689 A1 4/2009

(Continued)

Primary Examiner — Ellen C Hammond

(57) **ABSTRACT**

A spinal implant comprises a body including an inner surface that defines a cavity configured for disposal of a member. A locking element is engageable with the member within the cavity to fix the member with the body. The body further includes a wall that defines a bay configured for disposal of a longitudinal element being engageable with the wall to fix the longitudinal element with the body independent of the member. Systems and methods are disclosed.
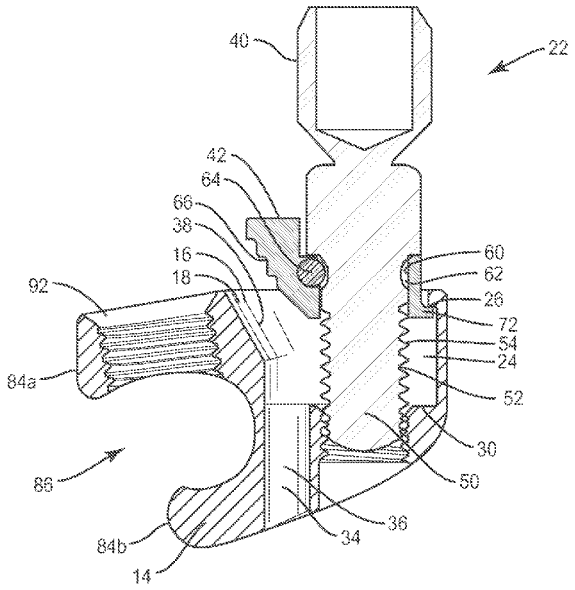
16 Claims, 7 Drawing Sheets