US007523576B1

(12) **United States Patent**
Petty

(10) **Patent No.: US 7,523,576 B1**
(45) **Date of Patent: Apr. 28, 2009**

(54) **POINT-OF-PURCHASE PROMOTIONAL ARTICLE**

(75) Inventor: **Catherine A. Petty**, Port Barrington, IL (US)

(73) Assignee: **The Meyers Printing Companies, Inc.**, Minneapolis, MN (US)

(*) Notice: Subject to any disclaimer, the term of this patent is extended or adjusted under 35 U.S.C. 154(b) by 0 days.

(21) Appl. No.: **11/742,894**

(22) Filed: **May 1, 2007**

Related U.S. Application Data

(60) Provisional application No. 60/746,106, filed on May 1, 2006.

(51) **Int. Cl.**
G09F 3/14 (2006.01)

(52) **U.S. Cl.** ..... **40/664**; 40/6; 24/16 PB

(58) **Field of Classification Search** ..... 40/664, 40/668, 665, 645, 6, 300, 633; 24/16 PB, 24/17 R, 17 AP; D8/394
See application file for complete search history.

(56) **References Cited**

U.S. PATENT DOCUMENTS

627,920	A *	6/1899	Gould	40/665
2,016,059	A	10/1935	Stevens	
2,183,799	A *	12/1939	Wenk, Jr.	292/315
2,768,458	A *	10/1956	Anania	40/665
3,130,462	A *	4/1964	Mitchell	24/16 PB
3,550,295	A	12/1970	Anania	
3,837,101	A	9/1974	Young	
4,142,310	A	3/1979	Groselak et al.	
4,149,329	A	4/1979	Graves	
4,510,649	A *	4/1985	Yudis et al.	24/16 PB
4,630,384	A	12/1986	Breen	
4,761,904	A *	8/1988	Fast et al.	40/308
4,869,007	A *	9/1989	Fast	40/664
5,129,617	A	7/1992	MacWilliamson	
5,381,617	A	1/1995	Schwartztol et al.	
6,401,304	B1	6/2002	Dossett	
7,263,790	B2 *	9/2007	Richards	40/306

* cited by examiner

Primary Examiner—Gary C Hoge
(74) *Attorney, Agent, or Firm*—Nawrocki, Rooney & Sivertson, P.A.

(57) **ABSTRACT**

A promotional hang tag having clasping and flag portions and a line-of-weakness delimiting the portions in furtherance of disengaging the flag portion from the clasping portion is provided. The clasping portion includes an anchor and an anchor retainer. The anchor retainer includes an elongate slot and opposingly paired slits extending from opposing ends of the elongate slot. The elongate slot is characterized by an axis of elongation and is dimensioned to receive a free end portion of the anchor, the anchor received by the anchor retainer and retained within the elongate slot.
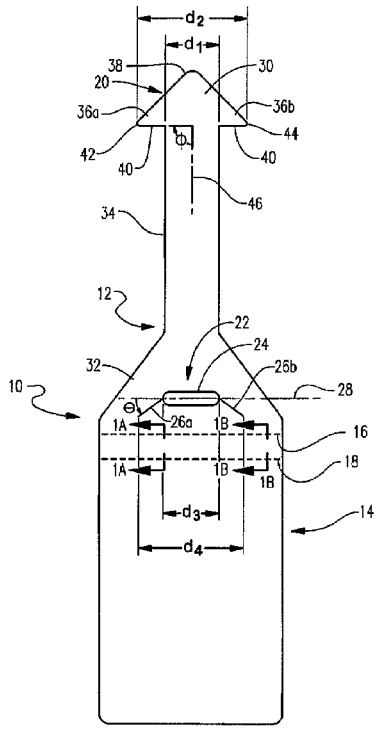
6 Claims, 4 Drawing Sheets