TOUCH DETECTING TEACHING MACHINE

Filed Dec. 26, 1967 4 Sheets-Sheet 2

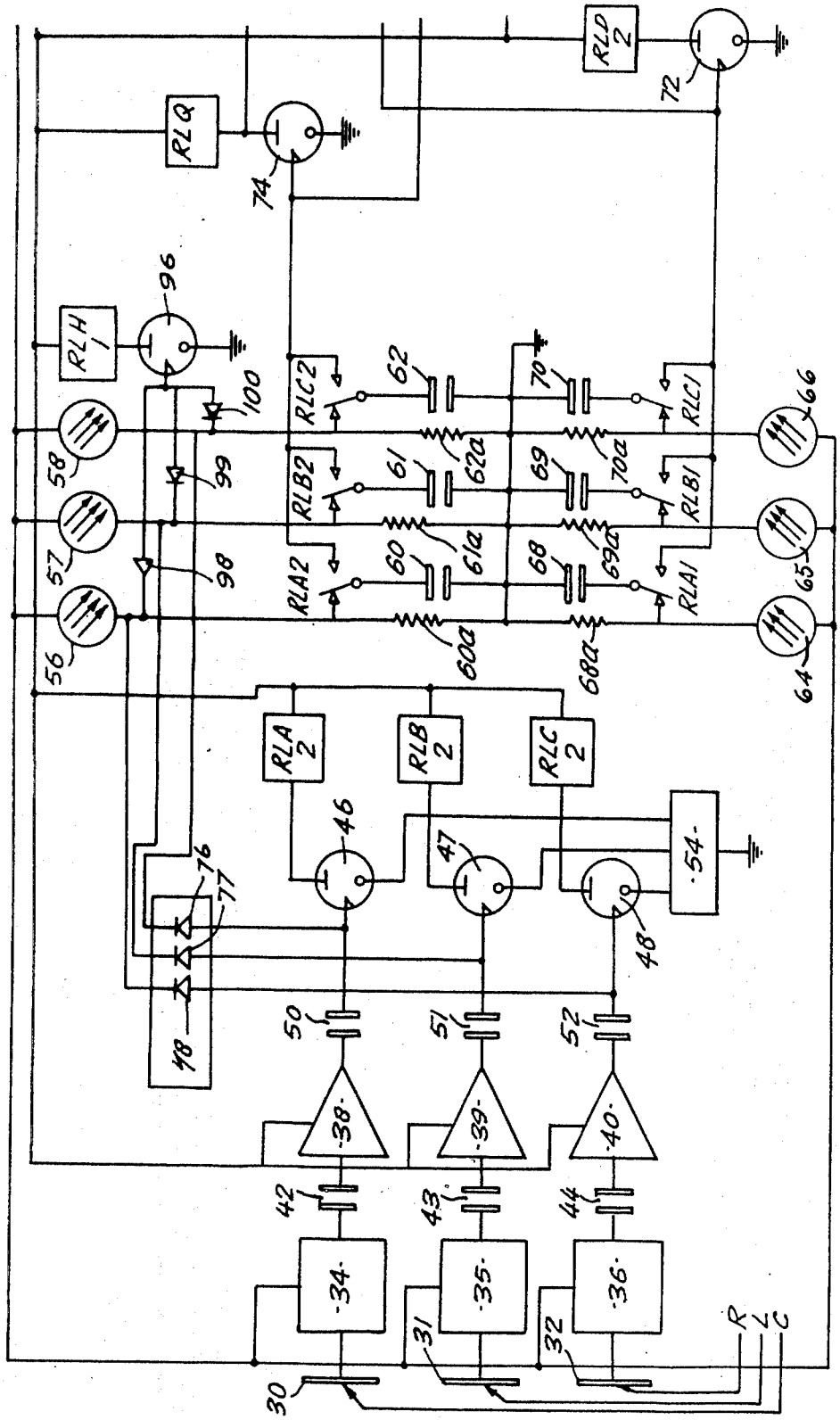

Fig. 4A.