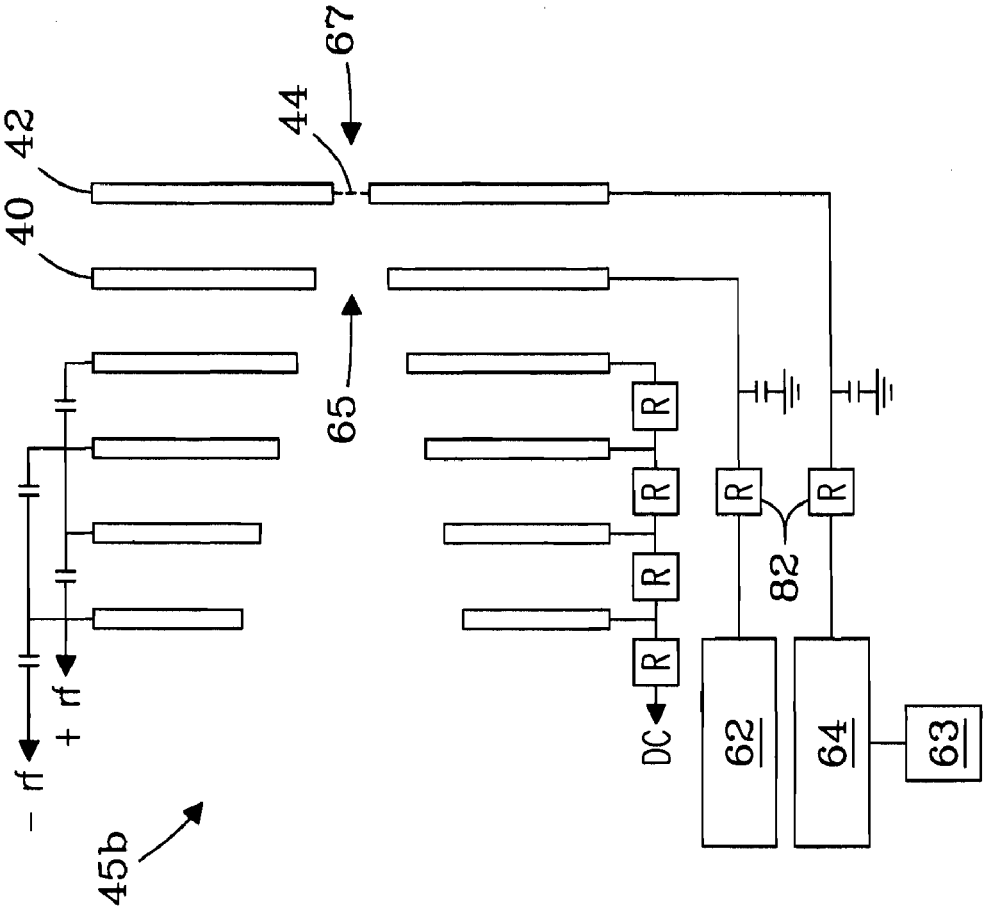
67
44
42
40
65
R
R
R
R
R
R
82
DC
62
64
63
- rf
+ rf
45b

Fig. 2b

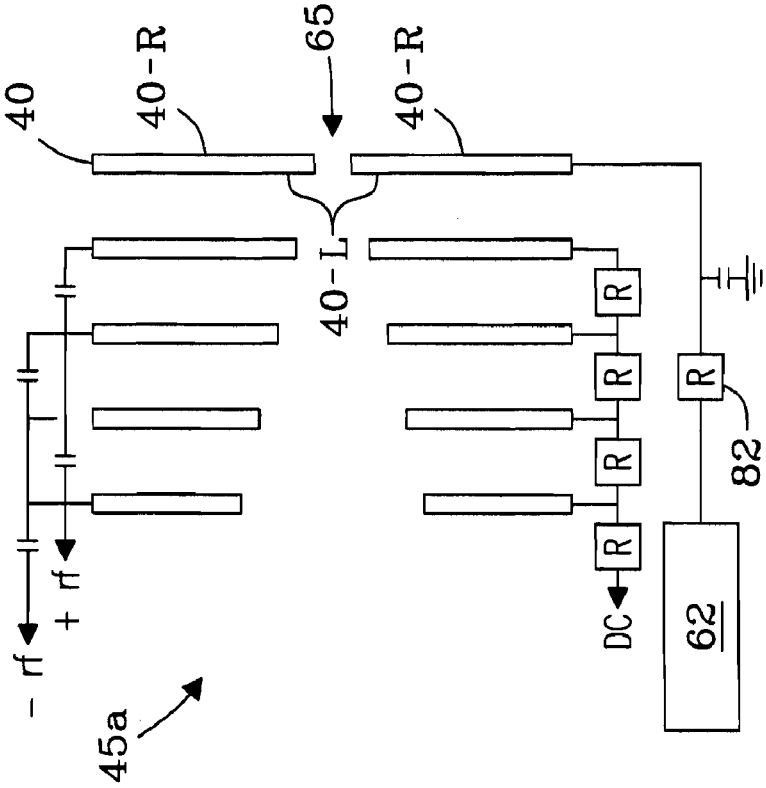
40
40-R
65
40-R
40-L
R
R
R
R
R
82
DC
62
- rf
+ rf
45a

Fig. 2a