June 27, 1950 J. H. HOMRIGHOUS 2,513,176

STEREOSCOPIC TELEVISION SYSTEM

Original Filed Feb. 24, 1943 5 Sheets-Sheet 1

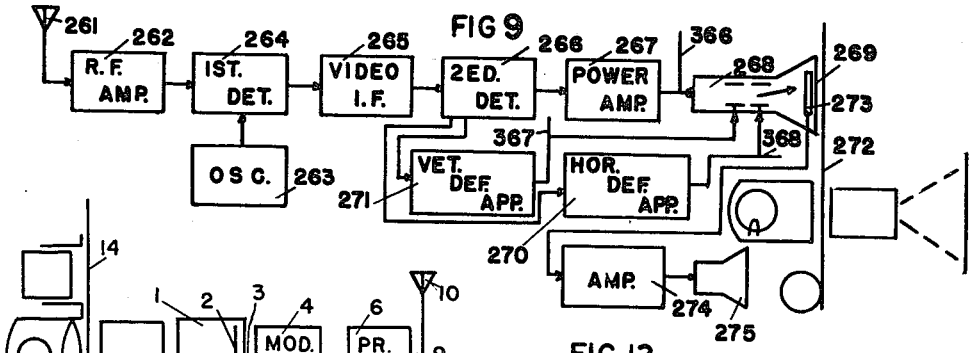

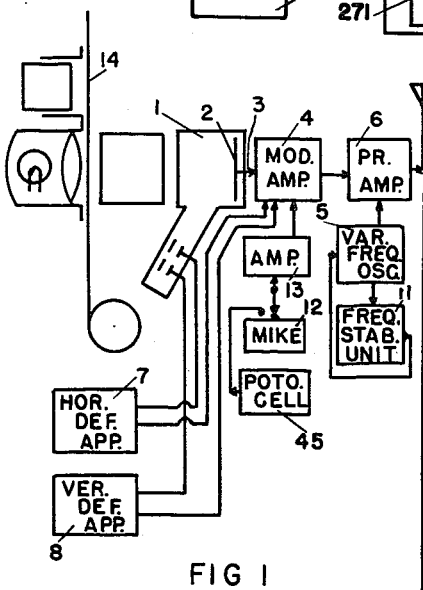

FIG 1

FIG 12

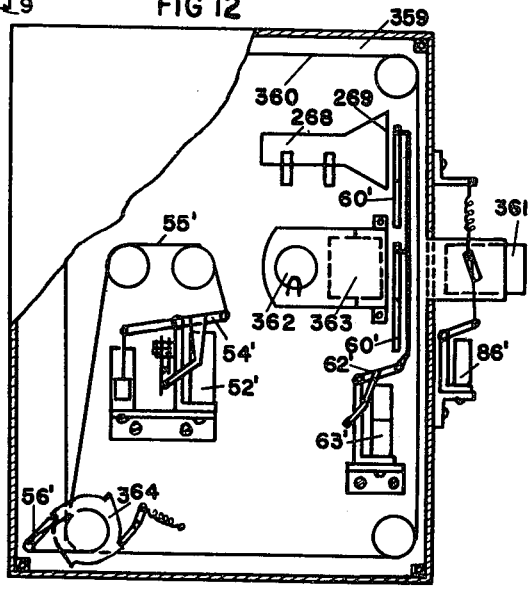

FIG.13

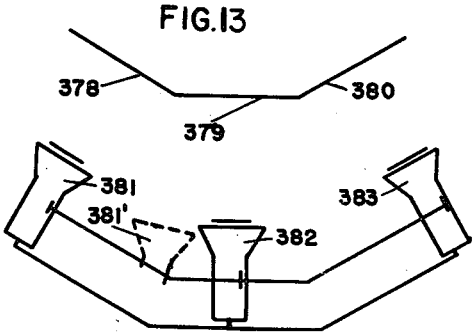

FIG 10

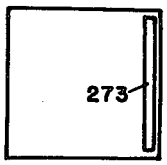

FIG 14

384 385

INVENTOR.

John H. Homrighous