US009411176B2

(12) **United States Patent**
Manouvrier et al.

(10) **Patent No.: US 9,411,176 B2**
(45) **Date of Patent: Aug. 9, 2016**

(54) **OXIDE CAPACITOR ELECTRO-OPTICAL PHASE SHIFTER**

(71) Applicants: **STMICROELECTRONICS (CROLLES 2) SAS**, Crolles (FR); **STMICROELECTRONICS SA**, Montrouge (FR)

(72) Inventors: **Jean-Robert Manouvrier**, Echirolles (FR); **Frédéric Boeuf**, Le Versoud (FR)

(73) Assignees: **STMICROELECTRONICS (CROLLES 2) SAS**, Crolles (FR); **STMICROELECTRONICS SA**, Montrouge (FR)

(*) Notice: Subject to any disclaimer, the term of this patent is extended or adjusted under 35 U.S.C. 154(b) by 0 days.

(21) Appl. No.: **14/492,435**

(22) Filed: **Sep. 22, 2014**

(65) **Prior Publication Data**

US 2015/0093067 A1 Apr. 2, 2015

(30) **Foreign Application Priority Data**

Oct. 2, 2013 (FR) 13 59558

(51) **Int. Cl.**
G02F 1/025 (2006.01)
G02F 1/225 (2006.01)
G02F 1/21 (2006.01)

(52) **U.S. Cl.**
CPC ***G02F 1/025*** (2013.01); ***G02F 1/225*** (2013.01); *G02F 2001/212* (2013.01)

(58) **Field of Classification Search**
CPC G02F 1/225; G02F 1/025; G02F 2001/212
See application file for complete search history.

(56) **References Cited**

U.S. PATENT DOCUMENTS

5,381,365 A * 1/1995 Ajika H01L 27/10817 257/296
8,554,022 B1 * 10/2013 Hochberg H01L 29/66977 257/21
8,958,678 B2 * 2/2015 Thomson G02F 1/025 385/132
2004/0208454 A1 * 10/2004 Montgomery G02F 1/2257 385/50
2004/0213307 A1 * 10/2004 Lieber B82Y 10/00 372/39

(Continued)

FOREIGN PATENT DOCUMENTS

WO 2011089386 7/2011
WO WO 2011089386 A1 * 7/2011 ..... G02F 1/025

OTHER PUBLICATIONS

Liu et al., A graphene-based broadband optical modulator, Letter-Research, Nature vol. 474, pp. 64-67, Jun. 2, 2011.*

(Continued)

Primary Examiner — Peter Radkowski
(74) *Attorney, Agent, or Firm* — Allen, Dyer, Doppelt, Milbrath & Gilchrist, P.A.

(57) **ABSTRACT**

An electro-optical phase shifter to be located in an optical waveguide may include a rib of a semiconductor material extending along a length of the optical waveguide and a control structure configured to modify a concentration of carriers in the rib according to a control voltage present between first and second control terminals of the phase shifter. The control structure may include a conductive layer covering a portion of the rib and electrically connected to a first of the control terminals. An insulating layer may be configured to electrically isolate the conductive layer from the rib.
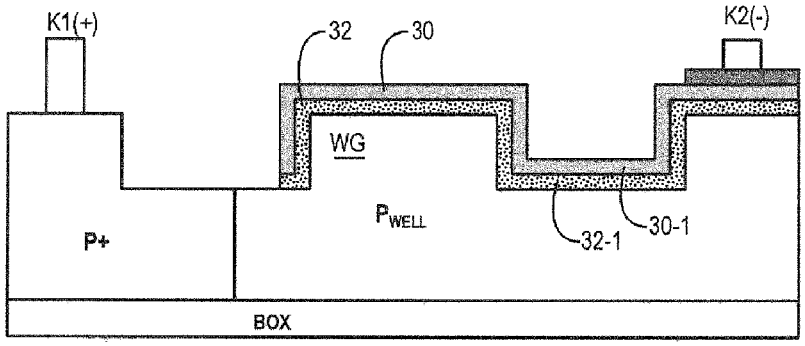
10 Claims, 4 Drawing Sheets