US009410776B1

(12) **United States Patent**
Hill

(10) **Patent No.: US 9,410,776 B1**
(45) **Date of Patent: Aug. 9, 2016**

(54) **ARROW FLETCHING APPARATUS**

(71) Applicant: **Daniel Jones Hill**, Commerce, GA (US)

(72) Inventor: **Daniel Jones Hill**, Commerce, GA (US)

(*) Notice: Subject to any disclaimer, the term of this patent is extended or adjusted under 35 U.S.C. 154(b) by 0 days.

(21) Appl. No.: **14/741,401**

(22) Filed: **Jun. 16, 2015**

(51) **Int. Cl.**
F42B 6/06 (2006.01)

(52) **U.S. Cl.**
CPC ***F42B 6/06*** (2013.01)

(58) **Field of Classification Search**
CPC F42B 6/06
See application file for complete search history.

(56) **References Cited**

U.S. PATENT DOCUMENTS

2,887,319 A * 5/1959 Lay F42B 6/06 473/586
3,815,916 A * 6/1974 Meszaros F42B 6/06 273/DIG. 4
4,204,307 A 5/1980 Pfetzing
5,427,385 A * 6/1995 Conrad F42B 6/06 473/586
7,331,886 B2 2/2008 Morris et al.
7,758,457 B2 * 7/2010 Marshall F42B 6/06 473/586
7,874,947 B1 1/2011 Wolfinbarger et al.
7,892,119 B2 * 2/2011 Marshall F42B 6/06 473/586
7,955,201 B2 6/2011 Harwath et al.
8,465,384 B2 6/2013 Blosser et al.
8,870,691 B2 10/2014 Marshall
9,046,329 B2 6/2015 Blosser et al.

* cited by examiner

Primary Examiner — John Ricci

(57) **ABSTRACT**

An arrow fletching apparatus for use in the sport of archery is provided. The fletching apparatus is used in place of conventional fletching and provides for adjustability and easy replacement of the apparatus itself or individual fletches in the field. The fletching apparatus comprises a body and a plurality of fletches. The body is kept in place on the arrow shaft by a friction fit and the fletches are likewise kept in place within a slot on the body by a friction fit.
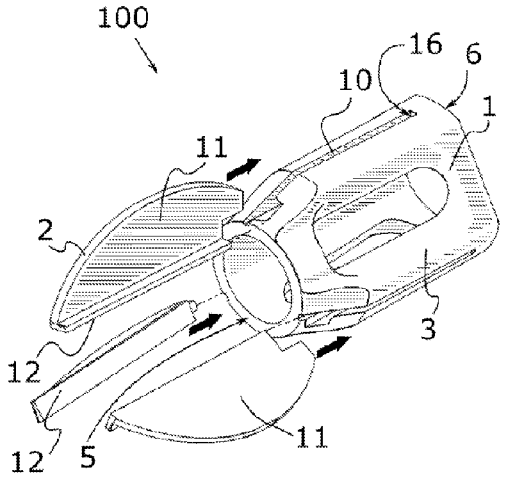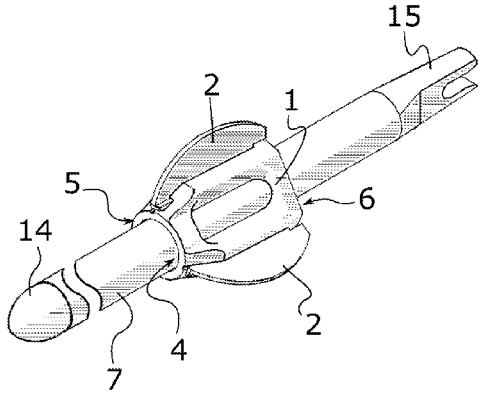
14 Claims, 4 Drawing Sheets