US009409476B2

(12) **United States Patent**
Randolph et al.

(10) **Patent No.: US 9,409,476 B2**
(45) **Date of Patent: Aug. 9, 2016**

(54) **FUEL FILL APPARATUS FOR USE WITH FUEL DELIVERY SYSTEMS**

(75) Inventors: **Eric Randolph**, Fond du Lac, WI (US); **Tony Slabaugh**, Belmont, MI (US); **Patrick Roach**, Lowell, MI (US)

(73) Assignee: **BRUNSWICK CORPORATION**, Lake Forest, IL (US)

(*) Notice: Subject to any disclaimer, the term of this patent is extended or adjusted under 35 U.S.C. 154(b) by 930 days.

(21) Appl. No.: **13/242,942**

(22) Filed: **Sep. 23, 2011**

(65) **Prior Publication Data**

US 2012/0074137 A1 Mar. 29, 2012

Related U.S. Application Data

(60) Provisional application No. 61/386,471, filed on Sep. 25, 2010.

(51) **Int. Cl.**
B60K 15/04 (2006.01)
B60K 15/035 (2006.01)

(52) **U.S. Cl.**
CPC ***B60K 15/04*** (2013.01); ***B60K 15/035*** (2013.01); ***B60K 15/0406*** (2013.01); *B60K 15/03519* (2013.01); *B60K 2015/03538* (2013.01); *B60K 2015/0445* (2013.01)

(58) **Field of Classification Search**
CPC .. B60K 15/04; B60K 15/0406; B60K 15/035; B60K 2015/03523
USPC 141/348–350, 367, 383, 290, 59; 220/86.2, 304, 366.1, 367.1, 220/203.2–203.29
See application file for complete search history.

(56) **References Cited**

U.S. PATENT DOCUMENTS

4,337,873	A *	7/1982	Johnson	220/203.02
5,275,213	A *	1/1994	Perkins	141/59
5,327,946	A *	7/1994	Perkins	141/59
5,503,199	A *	4/1996	Whitley et al.	141/312
5,507,324	A *	4/1996	Whitley et al.	141/59
6,935,267	B1 *	8/2005	Cotton	114/364
7,665,492	B2 *	2/2010	Burstein	B67C 11/02 141/332
7,726,363	B2 *	6/2010	Benjey et al.	141/302
8,539,993	B2 *	9/2013	Hagano	141/350
2007/0108211	A1 *	5/2007	Zhu	220/367.1
2011/0084076	A1 *	4/2011	Whelan et al.	220/367.1

* cited by examiner

Primary Examiner — Mark A Laurenzi
Assistant Examiner — Timothy P Kelly
(74) *Attorney, Agent, or Firm* — Hanley, Flight and Zimmerman, LLC

(57) **ABSTRACT**

Fuel fill apparatus for use with fluid delivery systems are described. An example fuel fill apparatus includes a body defining a throat area adjacent an opening of the body where the opening is configured to receive a fuel cap. A fuel fill portion defines a first passageway extending at a non-perpendicular angle relative to a longitudinal axis of the opening and a vent portion defines a second passageway. The first passageway is fluidly coupled to the second passageway via the throat area and a fuel nozzle retainer is disposed within the throat area.
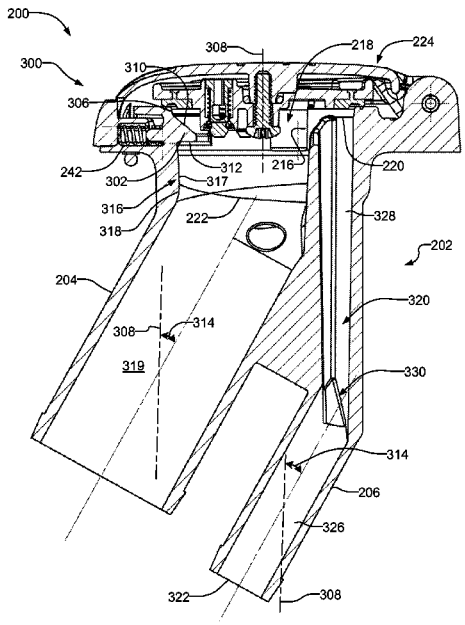
23 Claims, 11 Drawing Sheets