US009409276B2

(12) **United States Patent**
Tsai et al.

(10) **Patent No.: US 9,409,276 B2**
(45) **Date of Patent: Aug. 9, 2016**

(54) **CMP POLISHING PAD HAVING EDGE EXCLUSION REGION OF OFFSET CONCENTRIC GROOVE PATTERN**

(71) Applicant: **Cabot Microelectronics Corporation**, Aurora, IL (US)

(72) Inventors: **Ching-Ming Tsai**, Jhudong Township (TW); **Shi-Wei Cheng**, Taoyuan (TW); **Jia-Cheng Hsu**, Tainan (TW); **Kun-Shu Yang**, Hsinchu (TW); **Hui-Feng Chen**, Hsinchu (TW); **Gregory Gaudet**, Newark, IL (US); **Sheng-Huan Liu**, Taoyuan Hsien (TW)

(73) Assignee: **Cabot Microelectronics Corporation**, Aurora, IL (US)

(*) Notice: Subject to any disclaimer, the term of this patent is extended or adjusted under 35 U.S.C. 154(b) by 0 days.

(21) Appl. No.: **14/515,560**

(22) Filed: **Oct. 16, 2014**

(65) **Prior Publication Data**

US 2015/0111476 A1 Apr. 23, 2015

Related U.S. Application Data

(60) Provisional application No. 61/892,623, filed on Oct. 18, 2013.

(51) **Int. Cl.**
B24B 37/26 (2012.01)

(52) **U.S. Cl.**
CPC ***B24B 37/26*** (2013.01)

(58) **Field of Classification Search**
CPC B24B 37/26
USPC 451/526–539
See application file for complete search history.

(56) **References Cited**

U.S. PATENT DOCUMENTS

5,177,908	A	1/1993	Tuttle	
5,527,215	A	6/1996	Rubino et al.	
5,645,469	A	7/1997	Burke et al.	
5,650,039	A	7/1997	Talieh	
5,842,910	A	12/1998	Krywanczyk et al.	
5,944,583	A *	8/1999	Cruz	B24B 37/24 451/287
5,990,012	A	11/1999	Robinson et al.	
6,019,666	A	2/2000	Roberts et al.	
6,089,966	A	7/2000	Arai et al.	
6,120,366	A	9/2000	Lin et al.	
6,159,088	A *	12/2000	Nakajima	B24B 37/26 451/527
6,241,596	B1	6/2001	Osterheld et al.	
6,254,456	B1	7/2001	Kirchner et al.	
6,390,891	B1	5/2002	Guha et al.	
6,520,843	B1	2/2003	Halley	
6,520,847	B2	2/2003	Osterheld et al.	
6,585,579	B2	7/2003	Jensen et al.	
6,645,061	B1	11/2003	Bennett et al.	
6,699,115	B2	3/2004	Osterheld et al.	

(Continued)

FOREIGN PATENT DOCUMENTS

EP	1 114 697 A2	7/2001
EP	1 284 841 B1	3/2005

Primary Examiner — George Nguyen
(74) *Attorney, Agent, or Firm* — Thomas Omholt; Arlene Hornilla; Francis J. Koszyk

(57) **ABSTRACT**

The invention provides a polishing pad and a method of using the polishing pad for chemically-mechanically polishing a substrate. The polishing pad comprises at least a grooved region and an exclusion region, wherein the exclusion region is adjacent to the circumference of the polishing pad, and wherein the exclusion region is devoid of grooves.
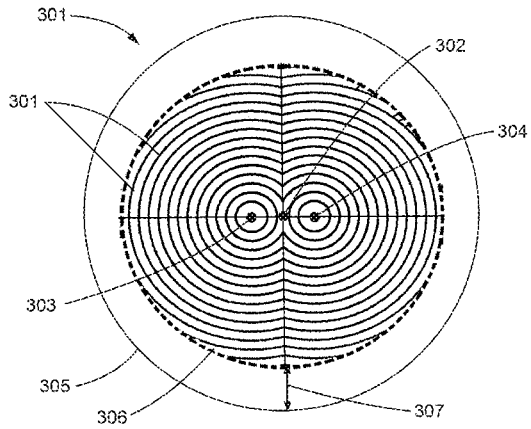
7 Claims, 7 Drawing Sheets