US009507376B2

(12) **United States Patent**
Kontkanen et al.

(10) **Patent No.: US 9,507,376 B2**
(45) **Date of Patent: Nov. 29, 2016**

(54) **OVERLAPPING DISPLAYS**

(75) Inventors: **Mikael Kontkanen**, Ilmarinen (FI); **Jussi Ropo**, Turku (FI); **Pasi Tuomo Antero Kemppinen**, Tampere (FI); **Vicente Calvo Alonso**, Piispanristi (FI)

(73) Assignee: **Nokia Technologies Oy**, Espoo (FI)

(*) Notice: Subject to any disclaimer, the term of this patent is extended or adjusted under 35 U.S.C. 154(b) by 210 days.

(21) Appl. No.: **13/325,294**

(22) Filed: **Dec. 14, 2011**

(65) **Prior Publication Data**

US 2013/0155598 A1 Jun. 20, 2013

(51) **Int. Cl.**
G06F 1/16 (2006.01)
H04M 1/02 (2006.01)

(52) **U.S. Cl.**
CPC ***G06F 1/1616*** (2013.01); ***G06F 1/1624*** (2013.01); ***G06F 1/1641*** (2013.01); ***H04M 1/0216*** (2013.01); *H04M 1/0237* (2013.01); *H04M 2250/16* (2013.01)

(58) **Field of Classification Search**
CPC .. G06F 1/1647; G06F 1/1652; G06F 1/1641; G06F 1/1616; G06F 1/1624; H04M 1/0216; H04M 2250/16; H04M 1/0237
USPC 361/679.01, 679.06, 679.21, 679.27, 361/679.28; 345/1.1–1.3, 901, 905
See application file for complete search history.

(56) **References Cited**

U.S. PATENT DOCUMENTS

5,189,632	A *	2/1993	Paajanen	G06F 1/1616 455/556.2
5,710,576	A *	1/1998	Nishiyama	G08B 3/1058 345/169
7,515,406	B2 *	4/2009	Kee et al.	361/679.21
2004/0021639	A1 *	2/2004	Hara	345/168
2006/0056143	A1 *	3/2006	Tatsukami et al.	361/683
2007/0076861	A1 *	4/2007	Ju	379/433.01
2007/0164923	A1 *	7/2007	Kanai et al.	345/1.1
2008/0079656	A1 *	4/2008	Kee et al.	345/1.3
2008/0253073	A1 *	10/2008	Kee et al.	361/681
2009/0104931	A1 *	4/2009	Chiang	455/556.1
2009/0219249	A1 *	9/2009	Hara	G06F 1/1616 345/168
2009/0322690	A1	12/2009	Hiltunen et al.	345/173
2010/0007576	A1 *	1/2010	Demuynck et al.	345/1.3
2010/0016038	A1 *	1/2010	Demuynck et al.	455/575.3
2010/0093409	A1 *	4/2010	Jokinen et al.	455/575.4
2011/0216064	A1 *	9/2011	Dahl et al.	345/428
2012/0019482	A1 *	1/2012	Wang	345/175
2012/0033353	A1 *	2/2012	Huang	361/679.01
2012/0307423	A1 *	12/2012	Bohn et al.	361/679.01
2013/0010405	A1 *	1/2013	Rothkopf et al.	361/679.01

* cited by examiner

Primary Examiner — Adrian S Wilson
Assistant Examiner — Abhishek Rathod
(74) *Attorney, Agent, or Firm* — Harrington & Smith

(57) **ABSTRACT**

An apparatus including a first electrical display; and a second electrical display movably connected to the first electrical display between a first configuration and a second configuration. In the first configuration the first and second electrical displays generally face each other. In the second configuration the first and second electrical displays do not generally face each other and are viewable from a same direction. The first and second electrical displays are sized and shaped such that in the first configuration a portion of the second electrical display is visible.
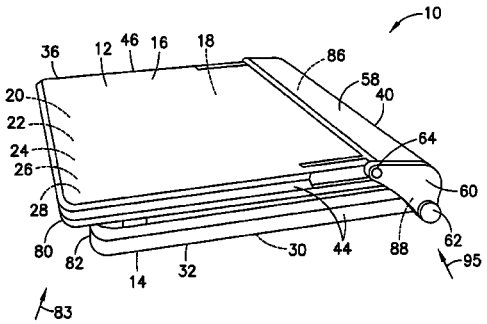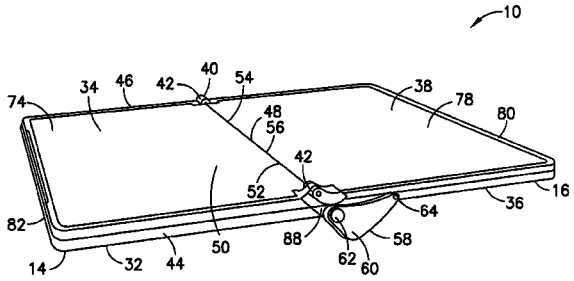
21 Claims, 8 Drawing Sheets