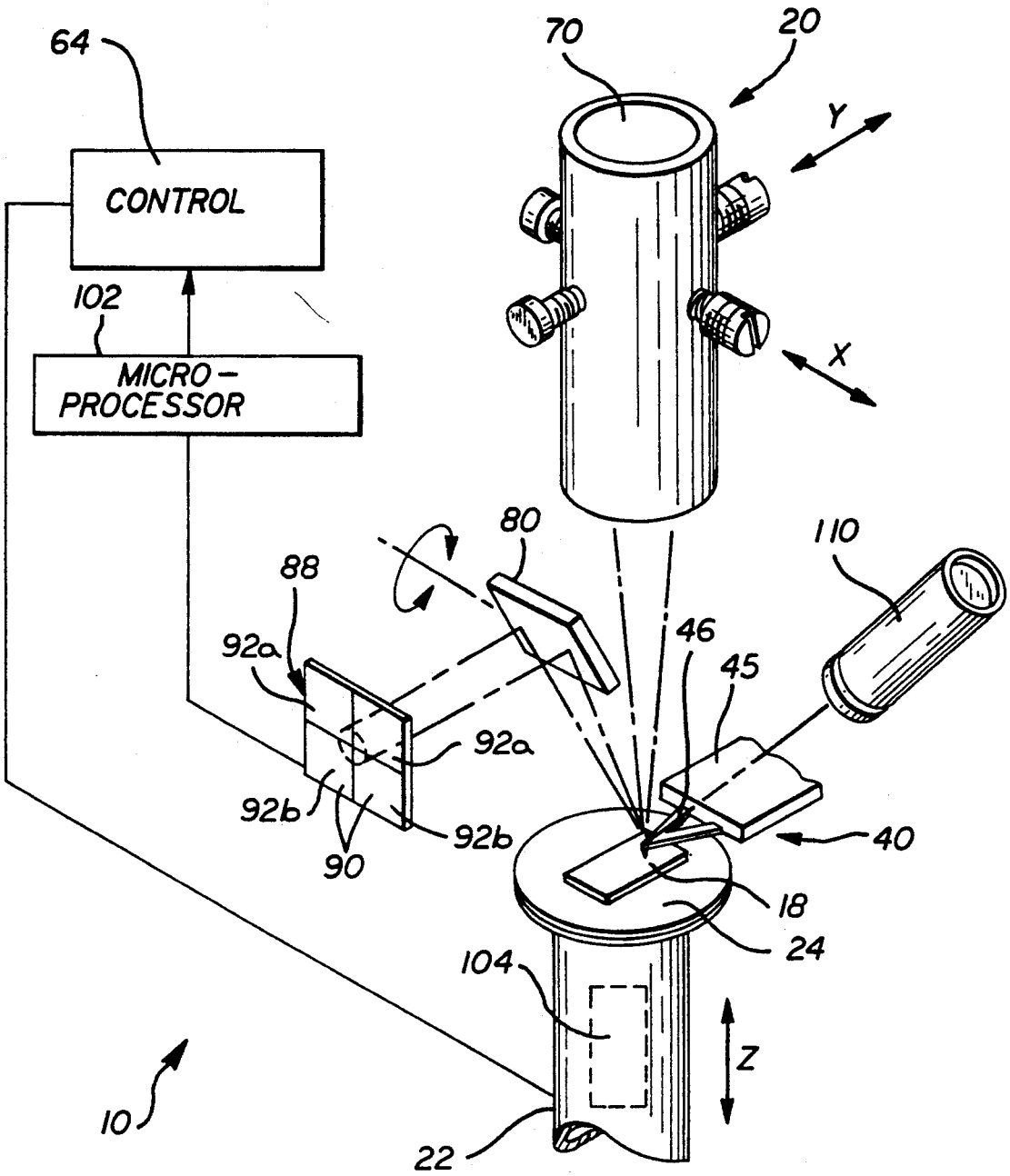
64
CONTROL
102
MICRO-
PROCESSOR
70
20
Y
X
80
110
88
92a
46
45
92a
92b
92b
90
40
18
24
104
Z
10
22

FIG. 1