Fig. 13

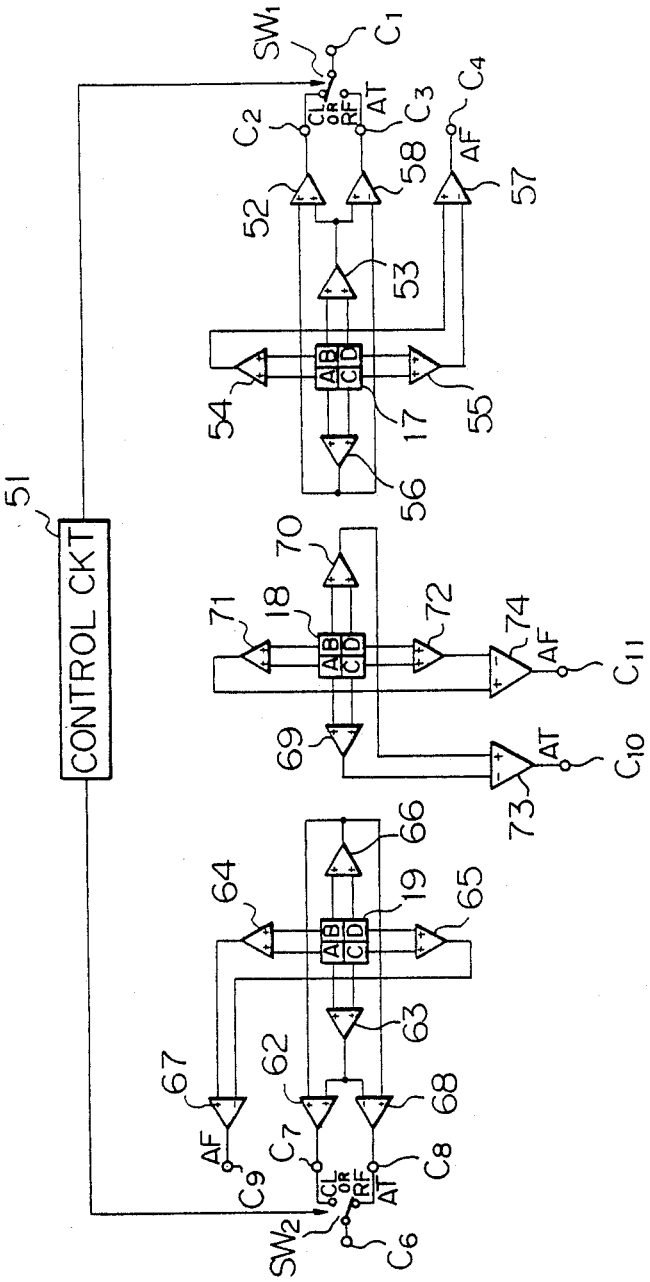
CONTROL CKT
51
SW1
SW2
C1
C2
C3
C4
C6
C7
C8
C9
C10
C11
CL OR RF
AT
AF
52
53
54
55
56
57
58
17
18
19
62
63
64
65
66
67
68
69
70
71
72
73
74
A B
C D