US005385475A

United States Patent [19]

Sudman et al.

[11] Patent Number: 5,385,475

[45] Date of Patent: Jan. 31, 1995

[54] **APPARATUS AND METHOD FOR GENERATING AND PRESENTING AN AUDIO VISUAL LESSON PLAN**

[75] Inventors: **David Sudman**, Gurnee; **Joseph Ulowetz**, Northbrook; **Dilip Singhi**, Glenview; **Maureen Pajerski**, Rolling Meadows, all of Ill.

[73] Assignee: **Rauland-Borg**, Skokie, Ill.

[21] Appl. No.: **40,468**

[22] Filed: **Apr. 1, 1993**

[51] **Int. Cl.**[6] **G09B 5/00**

[52] **U.S. Cl.** ..... **434/307 R**; 434/118; 434/350; 395/154; 348/8; 340/825.22; 455/4.1; 360/33.1

[58] **Field of Search** 434/118, 307, 308, 323, 434/350, 362, 365; 364/514; 358/85, 86; 340/825.06, 825.22, 825.24, 825.52, 825.55; 455/4.2, 5.1, 6.1; 360/33.1; 348/61, 8, 460, 552; 395/154

[56] **References Cited**

U.S. PATENT DOCUMENTS

3,691,528 9/1972 Calvagna et al. 340/825.07
3,691,650 9/1972 Arnold et al. .
3,753,240 8/1973 Merwin .
3,936,595 2/1976 Yanagimachi et al. .
4,000,510 12/1976 Cheney et al. .
4,021,933 5/1977 Hughes .
4,386,375 5/1983 Altman .
4,579,533 4/1986 Anderson et al. ..... 434/307 X
4,586,905 5/1986 Groff .
4,602,907 7/1986 Foster .
4,609,358 9/1986 Sangster .
4,671,772 6/1987 Slade et al. 434/219
4,675,755 6/1987 Baumeister et al. .
4,684,349 8/1987 Ferguson et al. .
4,689,022 8/1987 Peers et al. .
4,695,975 9/1987 Bedrij .
4,717,971 1/1988 Sawyer .
4,772,206 9/1988 Kerr et al. .
4,775,935 10/1988 Yourick .
4,796,099 1/1989 Compton .
4,798,543 1/1989 Spiece .
4,804,328 2/1989 Barrabee .
4,863,384 9/1989 Slade .
4,887,152 12/1989 Matsugaki et al. ..... 340/825.22 X
4,893,256 1/1990 Rutherfoord et al. .
4,920,432 4/1990 Eggers et al. 360/33.1
4,945,476 7/1990 Bodick et al. .
5,008,853 4/1991 Bly et al. .
5,018,082 5/1991 Obata et al. .
5,065,345 11/1991 Knowles et al. .
5,099,422 3/1992 Foresman et al. ..... 358/86 X
5,109,482 4/1992 Bohrman .
5,119,474 6/1992 Beitel et al. .
5,120,230 6/1992 Clark et al. .
5,132,992 7/1992 Yart et al. ..... 358/86 X
5,173,051 12/1992 May et al. .
5,175,851 12/1992 Johnson et al. .
5,176,520 1/1993 Hamilton ..... 434/307 X
5,193,208 3/1993 Zokota et al. ..... 340/825.24 X
5,223,825 6/1993 Ikegaki ..... 340/825.25 X

Primary Examiner—Richard J. Apley
Assistant Examiner—Joe H. Cheng
Attorney, Agent, or Firm—Leydig, Voit & Mayer, Ltd.

[57] **ABSTRACT**

A system and method for generating and presenting a lesson plan comprising audiovisual materials to a classroom. The system enables the automatic connection of audiovisual output signals from one or more audiovisual resources to classroom monitors in accordance with a predetermined sequence called a "lesson plan." The lesson plan includes labels for identifying selected ones of the audiovisual resources, and control commands for controlling the selected audiovisual resources. At a scheduled date and time, the lesson plan is loaded into the system and processed to automatically connect the output signals from selected audiovisual resources to specified monitors, and also to control the playback of the resources.

The system also includes a software program for generating the lesson plan and saving it for a future presentation. To assist with the generation and presentation, a database of available materials and a scheduling program are also provided.
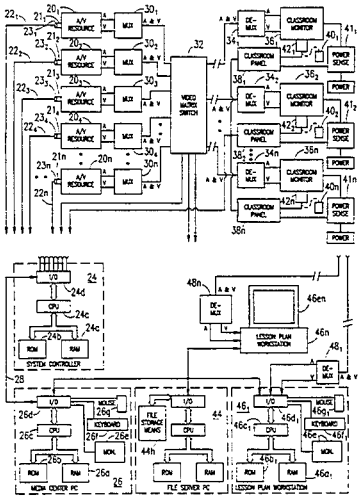
31 Claims, 21 Drawing Sheets