US005583675A

United States Patent [19]

Yamada et al.

[11] **Patent Number: 5,583,675**

[45] **Date of Patent: Dec. 10, 1996**

[54] **LIQUID CRYSTAL DISPLAY DEVICE AND A METHOD FOR PRODUCING THE SAME**

[75] Inventors: **Nobuaki Yamada**, Higashiosaka; **Masahiko Kondo**, Kitakatsuragi-gun; **Shuichi Kohzaki**, Nara; **Makoto Ohue**, Tenri; **Shinji Shimada**, Kashihara; **Masahiro Adachi**, Nara all of Japan

[73] Assignee: **Sharp Kabushiki Kaisha**, Osaka, Japan

[21] Appl. No.: **243,266**

[22] Filed: **May 16, 1994**

Related U.S. Application Data

[63] Continuation-in-part of Ser. No. 54,454, Apr. 27, 1993, Pat. No. 5,473,450.

[30] **Foreign Application Priority Data**

May 17, 1993	[JP]	Japan	5-115064
Oct. 8, 1993	[JP]	Japan	5-253452
Dec. 28, 1993	[JP]	Japan	5-349924

[51] **Int. Cl.**[6] **G02F 1/1335**; G02F 1/13; G02F 1/1339

[52] **U.S. Cl.** **349/84**; 349/86; 349/106; 349/110; 349/155

[58] **Field of Search** 359/51, 62, 67, 359/68, 81

[56] **References Cited**

U.S. PATENT DOCUMENTS

4,596,445	6/1986	Fergason	350/339 F
4,662,720	5/1987	Fergason	350/339 F
5,320,920	7/1994	Isoda et al.	430/7
5,333,074	7/1994	Hikmet	359/51
5,357,357	10/1994	Imazeki et al.	359/76
5,365,357	11/1994	Ohgawara et al.	359/67
5,418,094	5/1995	Sato et al.	359/68

FOREIGN PATENT DOCUMENTS

56-140321	11/1981	Japan .
58-501631	9/1983	Japan .
59-226322	12/1984	Japan .
61-502128	9/1986	Japan .
1-269922	10/1989	Japan .
2-99920	4/1990	Japan .
2-153318	6/1990	Japan .
2-153319	6/1990	Japan .
3-61925	3/1991	Japan .
3-278024	12/1991	Japan .
4-31823	2/1992	Japan .
4-31824	2/1992	Japan .
4-212928	8/1992	Japan .
4-338923	11/1992	Japan .
5-11237	1/1993	Japan .
5-27242	2/1993	Japan .
WO83/01016	3/1983	WIPO .
WO85/04262	9/1985	WIPO .

OTHER PUBLICATIONS

Yoshida et al, Japan Display '92, "A Full–Color TFT–LCD with a Polymer–Dispersed Structure", Oct. 1992.

Yamanaka et al, SID 92 DIGEST, "Integrated Black Matrix on TFT Arrays", May 1992, pp. 789–792.

Primary Examiner—Wael M. Fahmy
Assistant Examiner—Fetsum Abraham
Attorney, Agent, or Firm—Nixon & Vanderhye P.C.

[57] **ABSTRACT**

A liquid crystal display device includes a pair of substrates opposed to each other; a plurality of pixels for realizing display; and a liquid crystal layer interposed between the substrates and including a liquid crystal region corresponding to each of the pixels, the liquid crystal regions being surrounded by a polymer wall. At least one of the substrates is transparent and includes thereon an optical element for adjusting a transmittance of light therethrough. The optical element corresponds to each of the pixels. The optical element has a transmittance of no greater than 50% with respect to light of at least one wavelength in the range of 250 to 400 nm and has a maximum transmittance of at least 20% with respect to light of a wavelength of more than 400 nm.
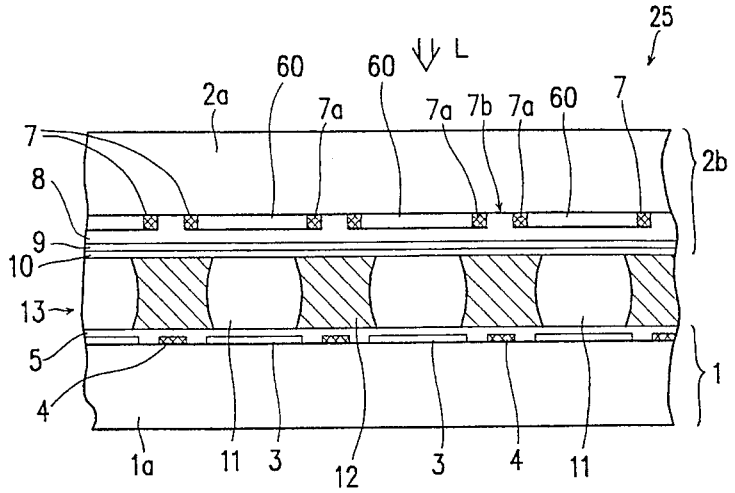
22 Claims, 16 Drawing Sheets