Fig. 1

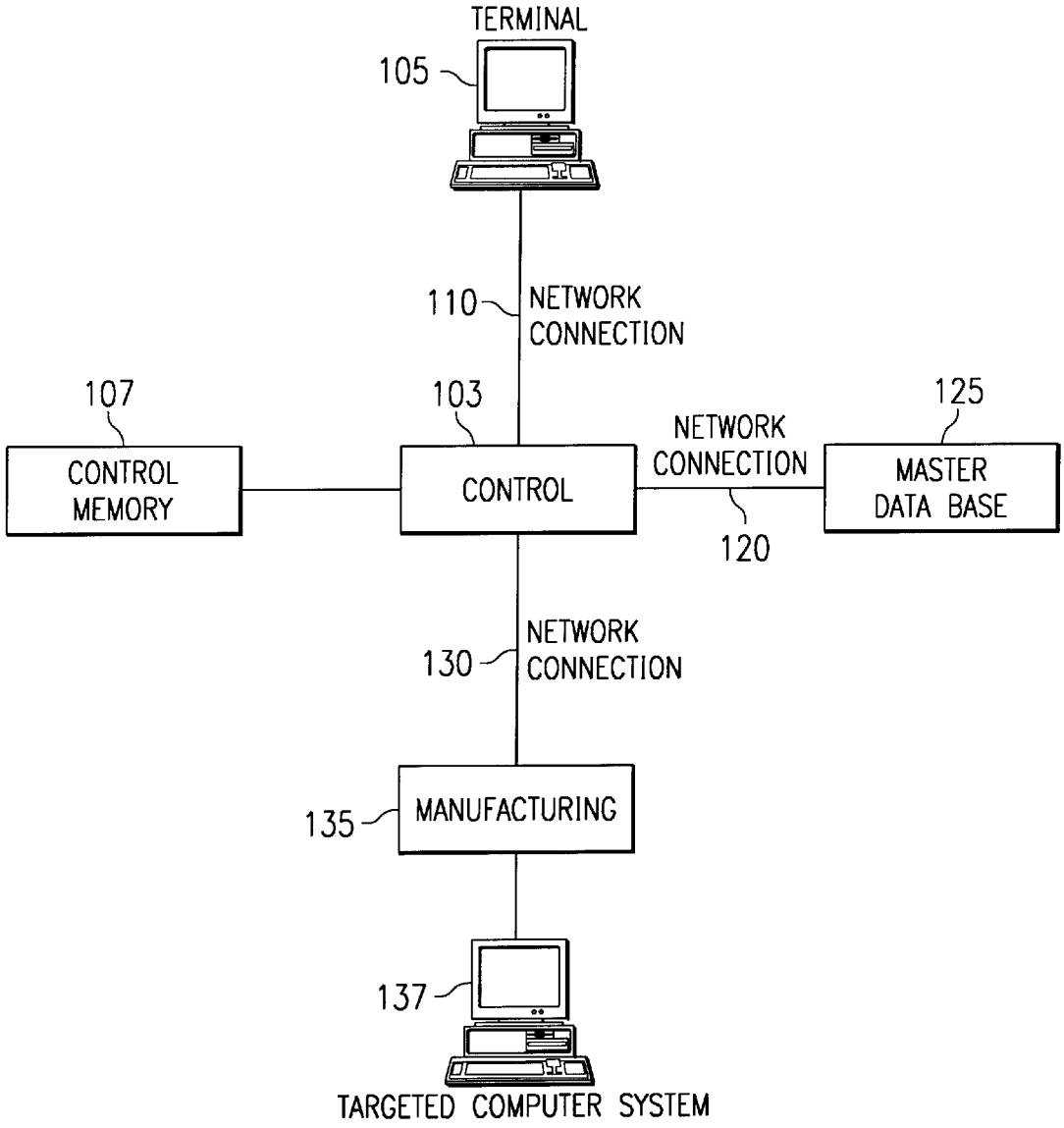
TERMINAL
105
110
NETWORK CONNECTION
107
CONTROL MEMORY
103
CONTROL
NETWORK CONNECTION
120
125
MASTER DATA BASE
130
NETWORK CONNECTION
135
MANUFACTURING
137
TARGETED COMPUTER SYSTEM