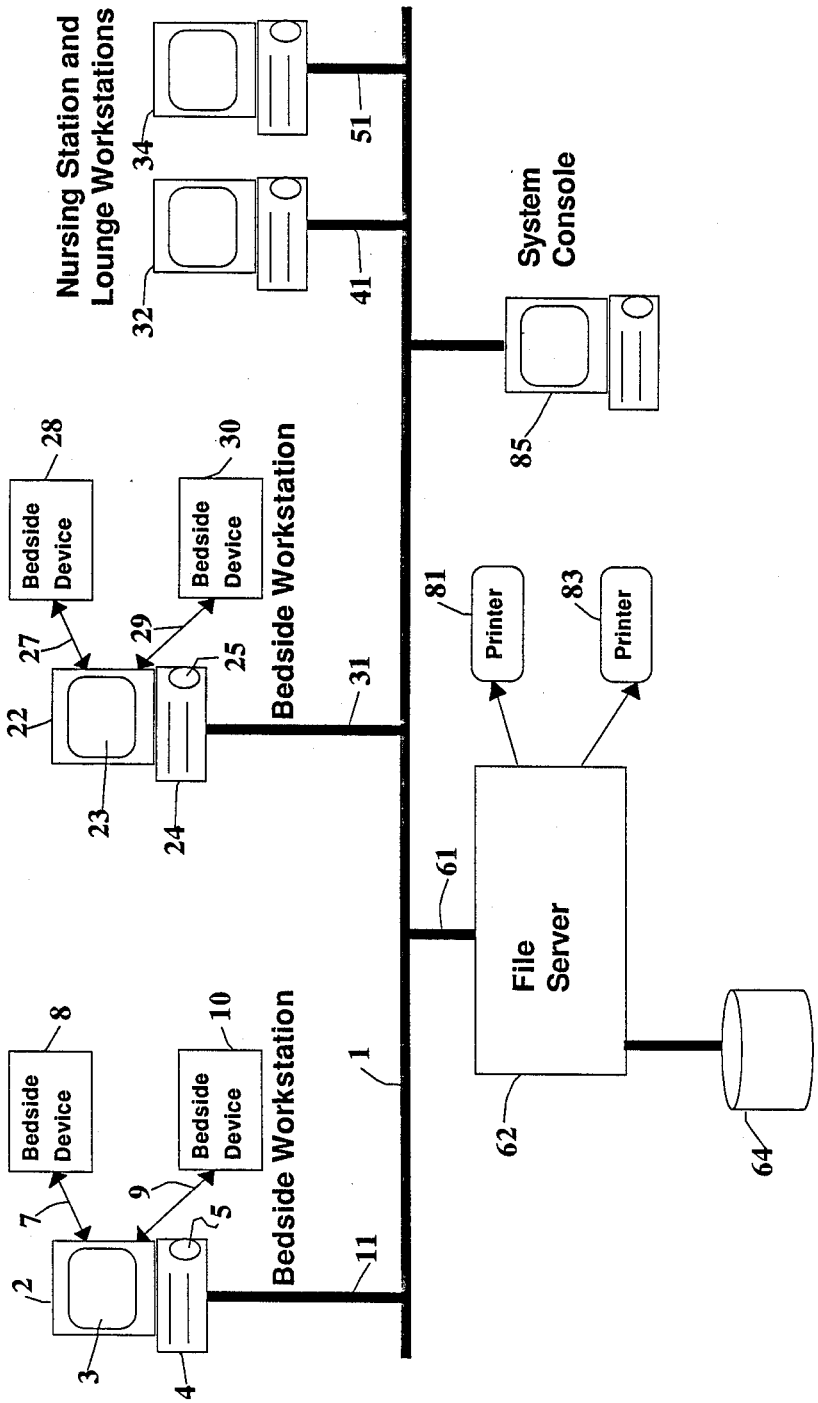
Nursing Station and Lounge Workstations
34
32
51
41
System Console
85
28
30
Bedside Device
Bedside Device
Bedside Workstation
27
29
25
22
23
24
31
81
83
Printer
Printer
61
File Server
62
64
8
10
Bedside Device
Bedside Device
Bedside Workstation
7
9
5
2
3
4
1
11

FIG. 1