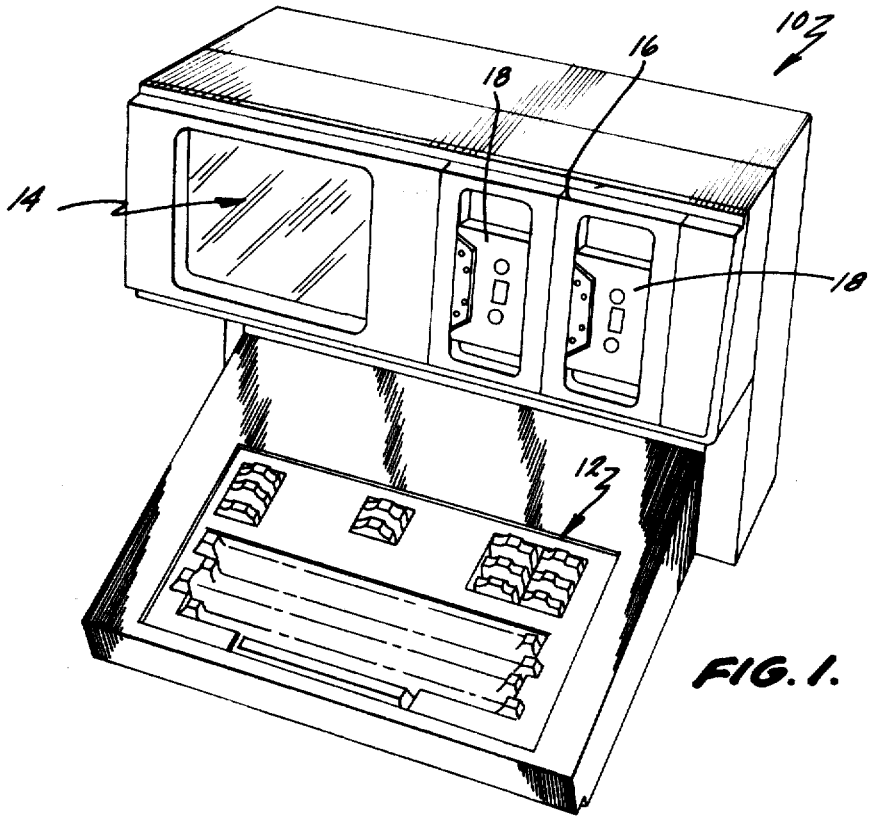


FIG. 1.

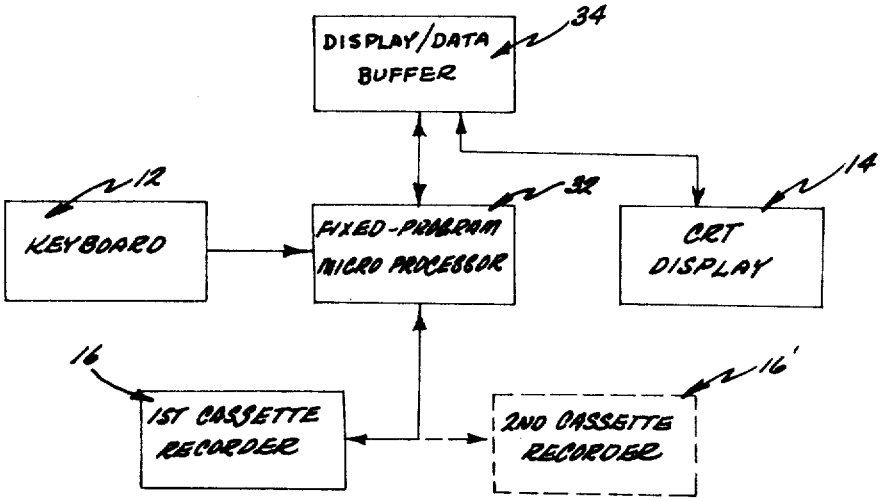


FIG. 2.

INVENTORS
SAMUEL N. IRWIN
MICHAEL R. LEVINE
BY Price, Heneveld, Huizenga & Cooper
ATTORNEYS