FLEXIBLE GASTROSCOPE

Filed May 17, 1963 5 Sheets-Sheet 2

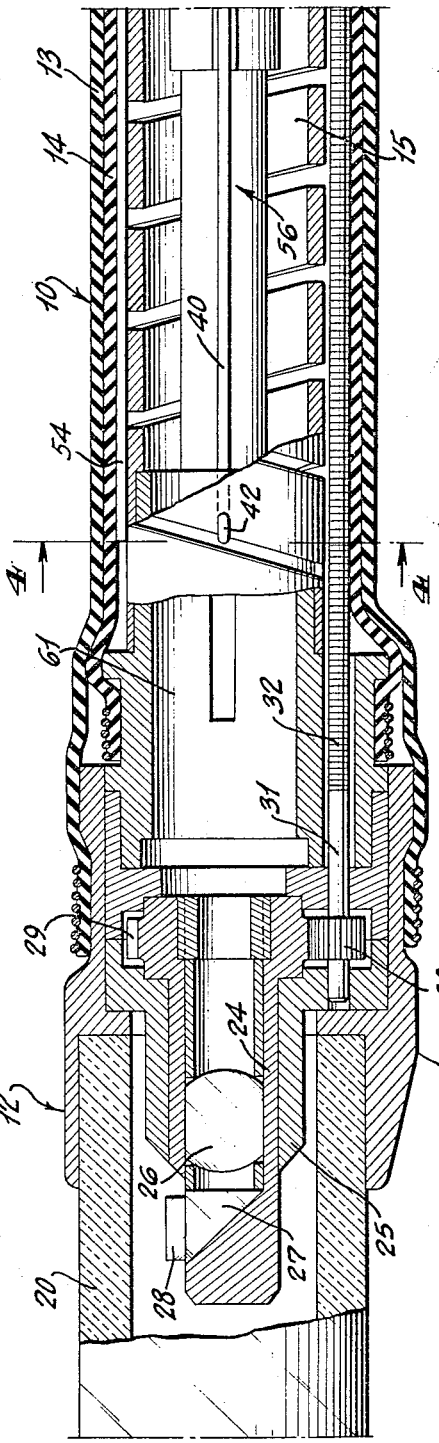

Fig. 3.

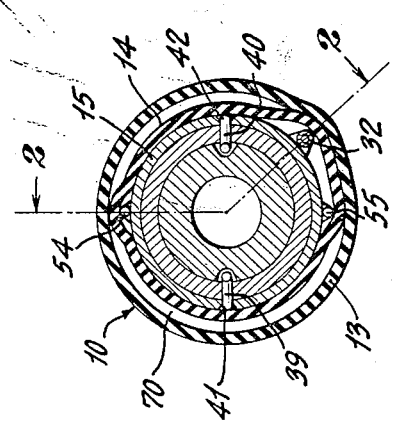

Fig. 4.

INVENTORS
JURI A. TSEPELEV
MARIA N. VILIAM-VILMONT
IGOR A. SLAVIN
ELIASAR B. ROSENFELD
BORIS I. USHAKOV
BY Glascock, Downing & Seebold
ATTORNEYS