350-438

SR

XR 3,256,875

June 21, 1966 J. A. TSEPELEV ET AL 3,256,875

FLEXIBLE GASTROSCOPE

Filed May 17, 1963 5 Sheets-Sheet 1

Fig. 1.

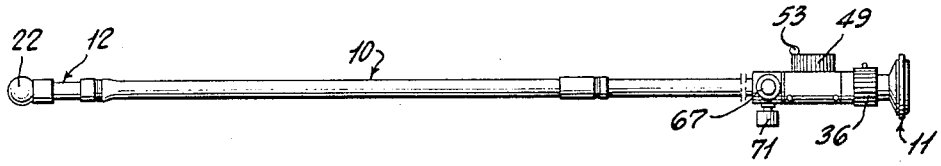

Fig. 2.

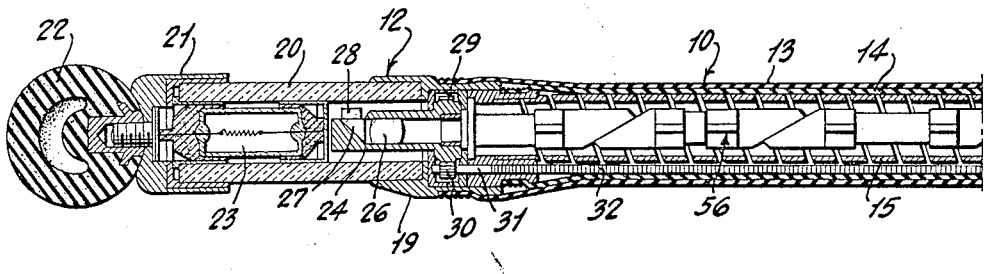

Fig. 5.

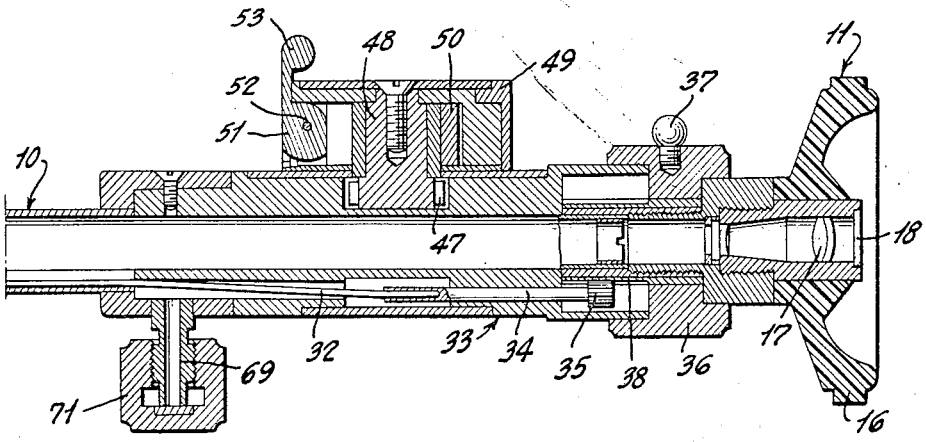

INVENTORS
JURI A. TSEPELEV
MARIA N. VILIAM-VILMONT
IGOR A. SLAVIN
ELIASAR B. ROSENFELD
BORIS I. USHAKOV

BY Glasscock, Downing & Seebold
ATTORNEYS