US007746175B2

(12) **United States Patent**
Rector

(10) **Patent No.: US 7,746,175 B2**
(45) **Date of Patent: Jun. 29, 2010**

(54) **SOLID STATE RF POWER AMPLIFIER**

(75) Inventor: **Robert M. Rector**, San Diego, CA (US)

(73) Assignee: **Keragis Corporation**, Poway, CA (US)

(*) Notice: Subject to any disclaimer, the term of this patent is extended or adjusted under 35 U.S.C. 154(b) by 0 days.

(21) Appl. No.: **12/336,413**

(22) Filed: **Dec. 16, 2008**

(65) **Prior Publication Data**

US 2009/0096530 A1 Apr. 16, 2009

Related U.S. Application Data

(63) Continuation of application No. 11/448,624, filed on Jun. 6, 2006, now Pat. No. 7,466,203.

(51) **Int. Cl.**
H03F 3/68 (2006.01)

(52) **U.S. Cl.** ..... **330/295**; 330/124 R; 330/53

(58) **Field of Classification Search** ..... 330/295, 330/124 R, 53

See application file for complete search history.

(56) **References Cited**

U.S. PATENT DOCUMENTS

4,724,400	A	2/1988	Luettgenau	
5,159,290	A	10/1992	Bartley et al.	
5,218,322	A	6/1993	Allison et al.	
5,329,248	A	7/1994	Izadian	
5,497,050	A	3/1996	Cheo	
5,631,446	A	5/1997	Quan	
5,801,598	A	9/1998	Tantawi et al.	
5,838,201	A *	11/1998	Sechi	330/286
6,037,840	A	3/2000	Myer	
6,198,284	B1	3/2001	Doty	
6,242,984	B1 *	6/2001	Stones et al.	330/295
6,344,777	B1	2/2002	Ingram et al.	

(Continued)

FOREIGN PATENT DOCUMENTS

JP 11-261352 9/1999

OTHER PUBLICATIONS

Office Action issued on Apr. 21, 2008 for U.S. Appl. No. 11/448,624.

(Continued)

Primary Examiner—Patricia Nguyen
(74) *Attorney, Agent, or Firm*—Knobbe Martens Olson & Bear LLP

(57) **ABSTRACT**

A power amplifier (power amplifier) having multiple solid state sub-amplifiers connected in parallel between the power amplifier input and the power amplifier output are described. The signal input to the power amplifier is provided to an RF splitter connected between the power amplifier input connector and the input of each of the sub-amplifiers. The RF splitter splits the input power from the signal input and provides the power to the sub-amplifier inputs through input electrical paths. The input electrical paths from the power amplifier input to the sub-amplifiers are substantially physically identical. Each of the sub-amplifiers drive an input of an RF combiner connected between the outputs of the sub-amplifiers and the output of the power amplifier. The RF combiner combines the output power from each of the sub-amplifiers through output electrical paths, and provides the combined power to the power amplifier output. The output electrical paths from the sub-amplifiers to the power amplifier output are substantially physically identical.
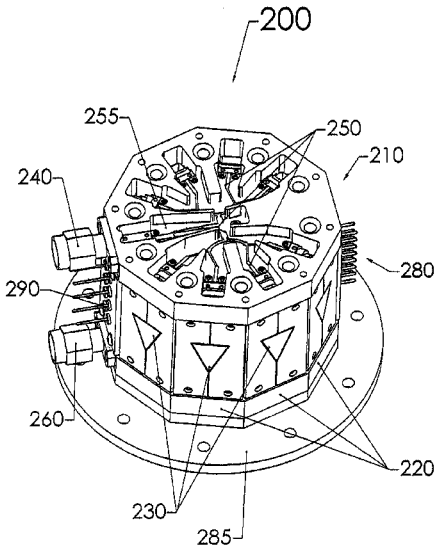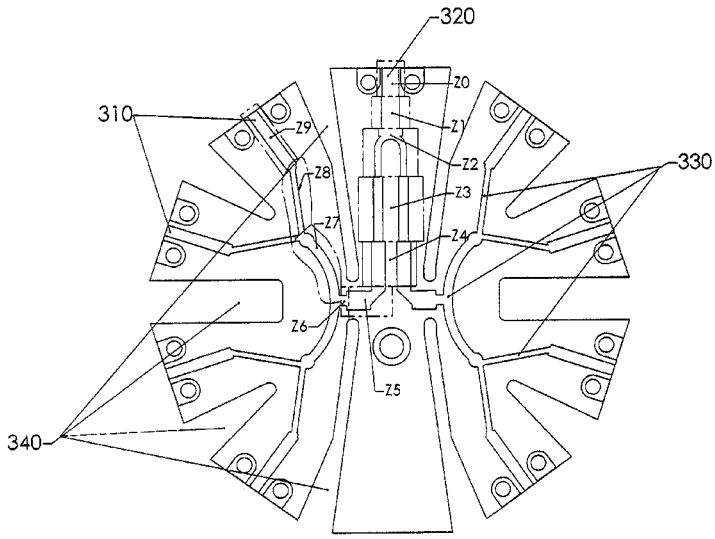
25 Claims, 10 Drawing Sheets