US005643275A

United States Patent [19]

Blake

[11] **Patent Number: 5,643,275**

[45] **Date of Patent: Jul. 1, 1997**

[54] **INTRAOCULAR LENS INJECTOR**

[75] Inventor: **Larry W. Blake**, Coto de Caza, Calif.

[73] Assignee: **Pharmacia Iovision, Inc.**, Irvine, Calif.

[21] Appl. No.: **466,037**

[22] Filed: **Jun. 6, 1995**

Related U.S. Application Data

[62] Division of Ser. No. 86,930, Jul. 2, 1993, Pat. No. 5,468,246.

[51] **Int. Cl.**[6] **A61B 17/00**; A61F 2/16

[52] **U.S. Cl.** **606/107**; 623/6

[58] **Field of Search** 623/6; 606/107

[56] **References Cited**

U.S. PATENT DOCUMENTS

2,761,446	9/1956	Reed .	
3,150,406	9/1964	Obitts .	
3,703,174	11/1972	Smith .	
3,757,781	9/1973	Smart .	
3,866,249	2/1975	Flom .	
3,991,426	11/1976	Flom et al. .	
4,002,169	1/1977	Cupler, II .	
4,053,953	10/1977	Flom et al. .	
4,122,556	10/1978	Poler .	
4,170,043	10/1979	Knight et al. .	
4,170,661	10/1979	Knight et al. .	
4,190,049	2/1980	Hager et al. .	
4,198,980	4/1980	Clark .	
4,214,585	7/1980	Bailey, Jr. .	
4,253,199	3/1981	Banko .	
4,325,375	4/1982	Nevyas .	
4,373,218	2/1983	Schachar .	
4,573,998	3/1986	Mazzocco .	
4,619,657	10/1986	Keates et al. .	
4,619,662	10/1986	Juergers, Jr. .	
4,681,102	7/1987	Bartell .	
4,687,485	8/1987	Lim et al. .	
4,699,140	10/1987	Holmes et al. .	
4,702,244	10/1987	Mazzocco	606/107
4,743,254	5/1988	Davenport .	
4,747,404	5/1988	Jampel et al. .	
4,759,359	7/1988	Willis et al. .	
4,759,763	7/1988	Bissonette et al. .	
4,763,650	8/1988	Hauser .	
4,765,329	8/1988	Cumming et al. .	
4,769,034	9/1988	Poley .	
4,781,719	11/1988	Kelman	623/6
4,785,810	11/1988	Baccala et al. .	
4,791,924	12/1988	Kelman .	
4,813,957	3/1989	McDonald .	
4,834,094	5/1989	Patton et al. .	
4,834,750	5/1989	Gupta	623/6

(List continued on next page.)

FOREIGN PATENT DOCUMENTS

0363213	4/1990	European Pat. Off. .
2604896	7/1987	France .
3610925	3/1986	Germany .
2191439	12/1987	United Kingdom .
WO8201646	5/1982	WIPO .
WO8910729	11/1989	WIPO .
WO9208423	5/1992	WIPO .

OTHER PUBLICATIONS

Staar Softrans Lens Injector System Brochure, 1991, pp. 1–4.

Primary Examiner—Mary Beth Jones
Attorney, Agent, or Firm—Knobbe, Martens, Olson & Bear, LLP

[57] **ABSTRACT**

An intraocular lens injector compresses an intraocular lens by rolling the lens into a tight spiral and injects the compressed lens though a relatively small incision in the eye, approximately 2–3 millimeters in length, resulting from a phacoemulsification procedure. The intraocular lens is inserted into a receiving channel of the injector in an uncompressed state and is urged into a cylindrical passageway. As the intraocular lens advances into the cylindrical passageway, the lens will roll upon itself into a tightly rolled spiral within the confines of the cylindrical passageway. An insertion rod is inserted into an open end of the cylindrical passageway and advances the compressed lens down the passageway. As the lens exits the passageway and enters the eye, the lens will expand back to its uncompressed state.
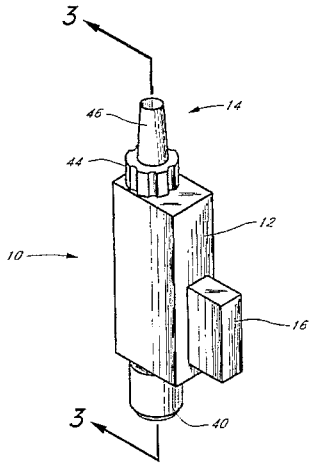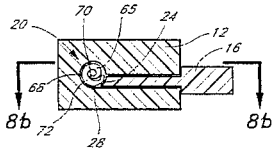
3 Claims, 13 Drawing Sheets