May 6, 1969 C. E. SHEPHERD 3,441,975

CONTINUOUS HINGE

Filed July 25, 1967

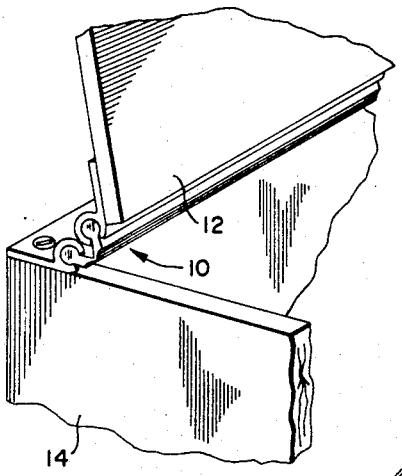

Fig. 1

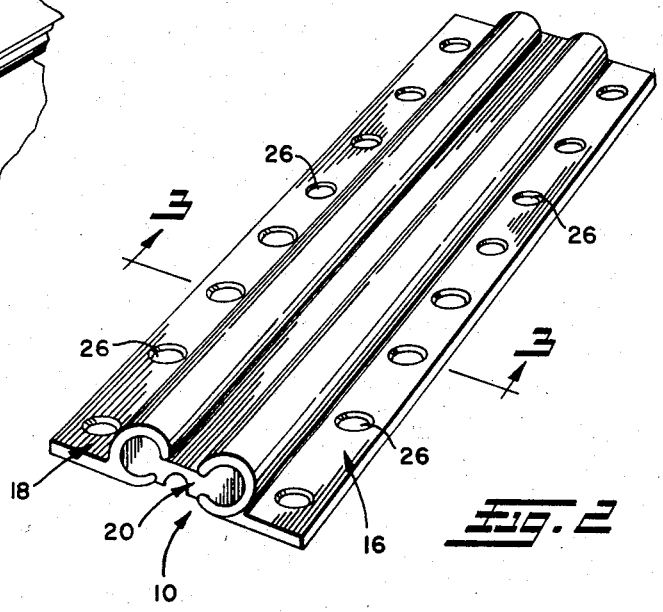

Fig. 2

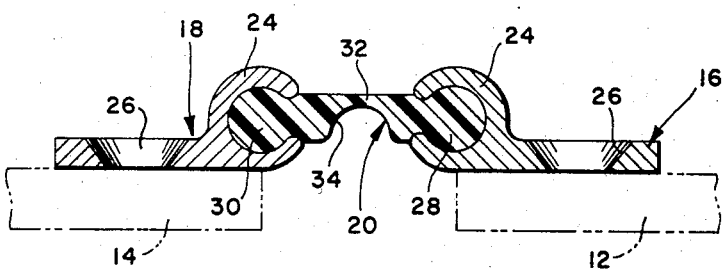

Fig. 3

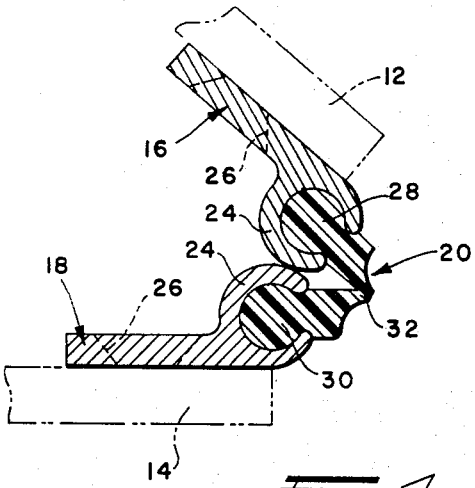

Fig. 4

INVENTOR
CHARLES E. SHEPHERD

BY
Oberlin, Maky, Donnelly & Renner
ATTORNEYS