US008228675B2

(12) **United States Patent**
Koplow

(10) **Patent No.: US 8,228,675 B2**
(45) **Date of Patent: Jul. 24, 2012**

(54) **HEAT EXCHANGER DEVICE AND METHOD FOR HEAT REMOVAL OR TRANSFER**

(75) Inventor: **Jeffrey P. Koplow**, San Ramon, CA (US)

(73) Assignee: **Sandia Corporation**, Albuquerque, NM (US)

(*) Notice: Subject to any disclaimer, the term of this patent is extended or adjusted under 35 U.S.C. 154(b) by 0 days.

(21) Appl. No.: **12/732,662**

(22) Filed: **Mar. 26, 2010**

(65) **Prior Publication Data**

US 2010/0177480 A1 Jul. 15, 2010

Related U.S. Application Data

(63) Continuation of application No. PCT/US2009/044550, filed on May 19, 2009, which is a continuation-in-part of application No. 12/185,570, filed on Aug. 4, 2008.

(60) Provisional application No. 61/164,188, filed on Mar. 27, 2009, provisional application No. 61/008,271, filed on Dec. 18, 2007.

(51) **Int. Cl.**
H05K 7/20 (2006.01)

(52) **U.S. Cl.** **361/697**; 361/679.47; 361/679.48; 361/679.54; 361/695; 361/696; 165/80.3; 165/104.33; 165/121

(58) **Field of Classification Search** ..... 361/679.46–679.51, 690–695, 361/704–717, 719–721; 165/80.2, 80.3, 165/80.4, 104.33, 186, 165, 85, 86; 415/1, 415/66, 68, 67, 119, 141, 177, 178, 199.4, 415/206, 220; 416/143, 146 R, 170 R, 186 R, 169 A, 189, 242, 235, 236 R, 237; 417/423.8; 310/179, 63, 64, 688, 695, 309, 156.38; 257/706, 722, E23.09, E23.099
See application file for complete search history.

(56) **References Cited**

U.S. PATENT DOCUMENTS

3,844,341	A	*	10/1974	Bimshas et al.	165/86
4,164,690	A	*	8/1979	Muller et al.	318/400.41
5,000,254	A	*	3/1991	Williams	165/85
5,197,858	A	*	3/1993	Cheng	417/14
5,296,775	A	*	3/1994	Cronin et al.	310/309
5,297,623	A	*	3/1994	Ogushi et al.	165/121
5,335,143	A	*	8/1994	Maling et al.	361/694
5,583,746	A	*	12/1996	Wang	361/697
5,616,974	A	*	4/1997	Yamada	310/68 B
5,727,928	A	*	3/1998	Brown	417/44.11
5,736,787	A		4/1998	Larimer	257/732
5,794,687	A	*	8/1998	Webster et al.	165/121
5,957,659	A	*	9/1999	Amou et al.	415/178
5,963,887	A	*	10/1999	Giorgio	702/64
5,979,541	A	*	11/1999	Saito	165/80.3
6,050,326	A	*	4/2000	Evans et al.	165/80.2
6,078,468	A		6/2000	Fiske	360/104
6,194,798	B1	*	2/2001	Lopatinsky	310/63

(Continued)

FOREIGN PATENT DOCUMENTS

JP 407169887 A * 7/1995

(Continued)

Primary Examiner — Michail V Datskovskiy
(74) *Attorney, Agent, or Firm* — Dorsey & Whitney LLP

(57) **ABSTRACT**

Systems and methods for a forced-convection heat exchanger are provided. In one embodiment, heat is transferred to or from a thermal load in thermal contact with a heat conducting structure, across a narrow air gap, to a rotating heat transfer structure immersed in a surrounding medium such as air.
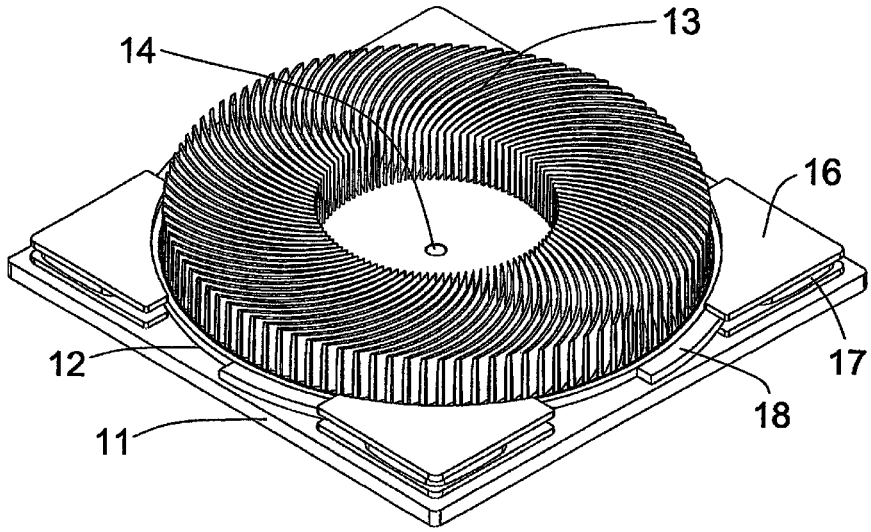
19 Claims, 12 Drawing Sheets