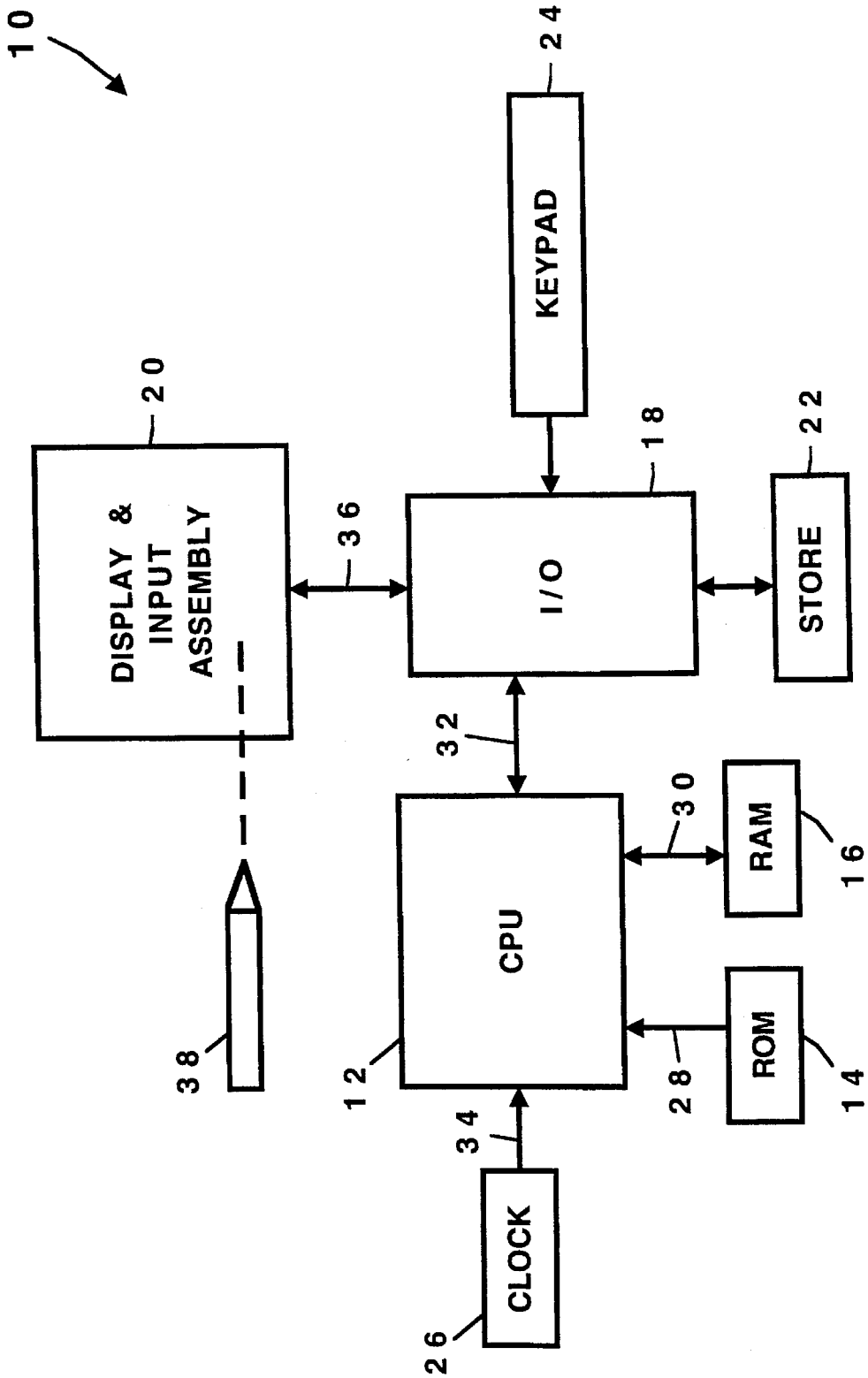
10
DISPLAY & INPUT ASSEMBLY
20
36
38
KEYPAD
24
I/O
18
STORE
22
32
CPU
12
30
RAM
16
ROM
14
28
CLOCK
26
34

FIG. 1