US005311175A

United States Patent [19]

Waldman

[11] Patent Number: 5,311,175

[45] Date of Patent: May 10, 1994

[54] METHOD AND APPARATUS FOR PRE-IDENTIFICATION OF KEYS AND SWITCHES

[76] Inventor: Herbert Waldman, 1739 52nd St., Brooklyn, N.Y. 11204

[21] Appl. No.: 607,715

[22] Filed: Nov. 1, 1990

[51] Int. Cl.[5] H03M 11/10

[52] U.S. Cl. 341/34; 341/22; 341/23; 341/27

[58] Field of Search ..... 341/21, 23, 27, 22, 341/24, 34; 200/5 A; 364/709.06, 709.12, 709.14, 709.15; 400/87, 476, 477, 479, 481, 485, 491.3; 178/17 C; 379/368, 52; 340/706, 711

[56] References Cited

U.S. PATENT DOCUMENTS

D. 280,099 8/1985 Topp ..... 379/52 X
4,028,695 6/1977 Saich 341/23
4,202,038 5/1980 Petersson ..... 341/23 X
4,700,377 10/1987 Yasuda et al. ..... 341/23 X

FOREIGN PATENT DOCUMENTS

2009047 6/1979 United Kingdom 400/491.3
2016184 9/1979 United Kingdom 364/709

Primary Examiner—Donald J. Yusko
Assistant Examiner—Michael Horabik

[57] ABSTRACT

A method and apparatus for keypads, for conveying audible, visual or tactile information to a user regarding the identity, function, proper usage or potential utility of a given key or group of keys. The information being invoked by the user through superficial or proximal manipulation of the given key without having pressed or manipulated it in a way that would invoke its normal function. The primary concern of the system is as an informational adjunct to a more traditional keypad.
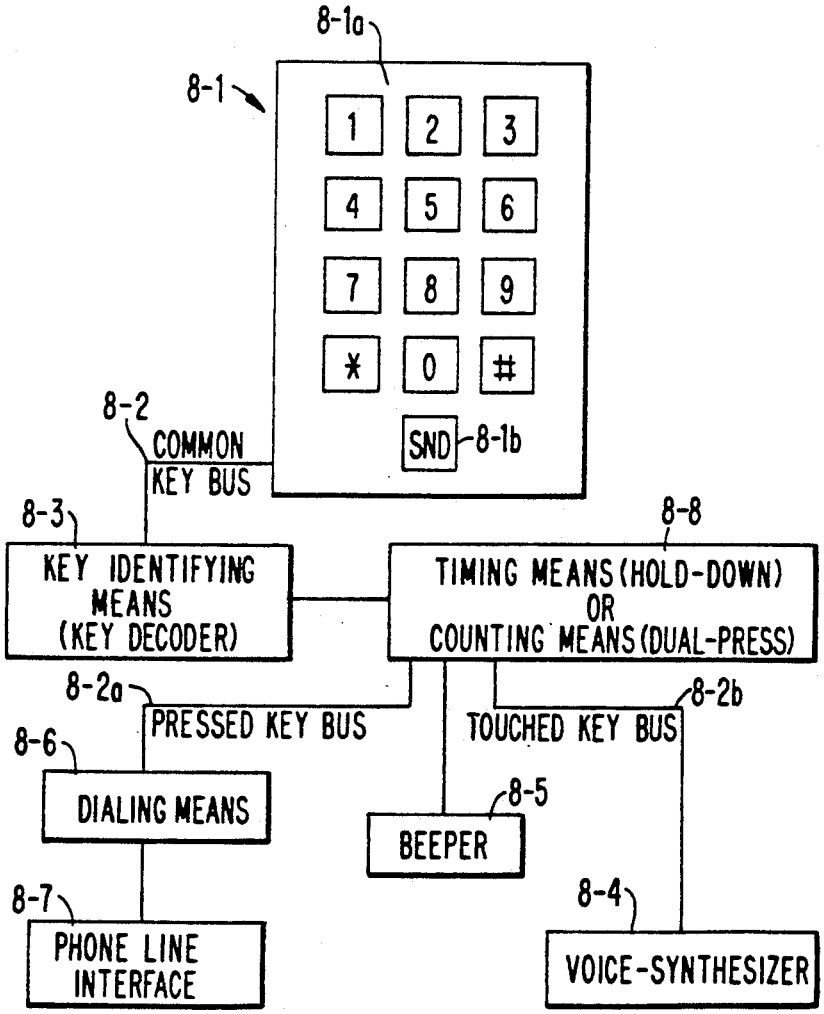
18 Claims, 8 Drawing Sheets