US009411075B2

(12) **United States Patent**
Choi et al.

(10) **Patent No.: US 9,411,075 B2**
(45) **Date of Patent: Aug. 9, 2016**

(54) **DISPLAY APPARATUS**

(71) Applicant: **SAMSUNG DISPLAY CO., LTD.**, Yongin, Gyeonggi-Do (KR)

(72) Inventors: **Byeong-Hwa Choi**, Yongin (KR); **Seung-Bae Lee**, Yongin (KR); **Eun-Jung Lee**, Yongin (KR); **Hak-Sun Kim**, Yongin (KR)

(73) Assignee: **SAMSUNG DISPLAY CO., LTD.**, Yongin, Gyeonggi-do (KR)

(*) Notice: Subject to any disclaimer, the term of this patent is extended or adjusted under 35 U.S.C. 154(b) by 281 days.

(21) Appl. No.: **14/269,415**

(22) Filed: **May 5, 2014**

(65) **Prior Publication Data**

US 2015/0085384 A1 Mar. 26, 2015

(30) **Foreign Application Priority Data**

Sep. 24, 2013 (KR) 10-2013-0113482

(51) **Int. Cl.**

G02F 1/01	(2006.01)
G02B 1/00	(2006.01)
B82Y 20/00	(2011.01)
G02B 5/00	(2006.01)

(52) **U.S. Cl.**

CPC ***G02B 1/007*** (2013.01); ***G02B 1/002*** (2013.01); *B82Y 20/00* (2013.01); *G02B 5/003* (2013.01); *Y10S 977/742* (2013.01); *Y10S 977/773* (2013.01); *Y10S 977/78* (2013.01)

(58) **Field of Classification Search**

CPC G02B 1/002; G02B 1/007; G02B 5/003; B82Y 15/00

See application file for complete search history.

(56) **References Cited**

U.S. PATENT DOCUMENTS

2008/0024792	A1	1/2008	Pendry et al.	
2009/0273662	A1 *	11/2009	Lucente	G02B 27/2214 348/43
2010/0232017	A1	9/2010	McCarthy et al.	
2012/0033283	A1	2/2012	Halsema	
2012/0326944	A1	12/2012	Choi et al.	

FOREIGN PATENT DOCUMENTS

KR	10-2011-0022681	A	3/2011
KR	10-2013-0007690	A	1/2013

OTHER PUBLICATIONS

J.B. Pendry, et al., "Controlling Electromagnetic Fields", Science, vol. 312, 1780 (2006), pp. 1780-1782.

Valdimir M. Shalaev, "Metamaterials: Technology of the Future", School of Electrical & Computer Engineering, Birck Nanotechnology Center, Purdue University.

Jeongwon Woo, "Quantum Metamaterials What is a Quantum Metamaterial?", Physics & High Technology, Mar. 2009.

"Superblack Material Absorbs Multiwavelengths of Light", Research & Technology, www.nasa.gov/goddard.

N. Reyren, et al., "Superconducting Interfaces Between Insulating Oxides", Science, vol. 317, (2007) pp. 1196-1199.

(Continued)

Primary Examiner — Joseph P Martinez

(74) *Attorney, Agent, or Firm* — Lee & Morse, P.C.

(57) **ABSTRACT**

A display apparatus including a display unit including at least one pixel area and a non-pixel area, the non-pixel area dividing the at least one pixel area; and a metamaterial structure that controls a path of light emitted from the at least one pixel area.
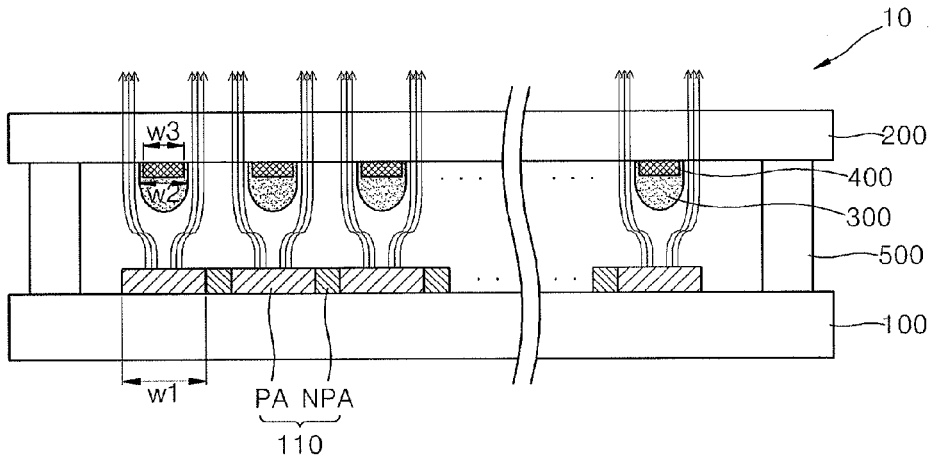
20 Claims, 6 Drawing Sheets