US009410475B2

(12) **United States Patent**
Morelli et al.

(10) **Patent No.: US 9,410,475 B2**
(45) **Date of Patent: Aug. 9, 2016**

(54) **SYSTEM AND METHOD FOR DETERMINING TURBINE DEGRADATION AND MITIGATING TURBINE DEGRADATION IN A VARIABLE GEOMETRY TURBOCHARGER**

(71) Applicant: **Ford Global Technologies, LLC**, Dearborn, MI (US)

(72) Inventors: **Anthony Morelli**, Troy, MI (US); **Brien Lloyd Fulton**, West Bloomfield, MI (US); **Thomas Kostrzewski**, Brownstown, MI (US); **Jason Ronald Smith**, Canton, MI (US); **Kyle Pohlkamp**, Superior Township, MI (US)

(73) Assignee: **Ford Global Technologies, LLC**, Dearborn, MI (US)

(*) Notice: Subject to any disclaimer, the term of this patent is extended or adjusted under 35 U.S.C. 154(b) by 270 days.

(21) Appl. No.: **14/300,147**

(22) Filed: **Jun. 9, 2014**

(65) **Prior Publication Data**

US 2015/0354442 A1 Dec. 10, 2015

(51) **Int. Cl.**

F02B 37/22	(2006.01)
F02M 25/07	(2006.01)
F02B 37/24	(2006.01)
F02B 39/16	(2006.01)
F02D 41/14	(2006.01)
F02D 41/22	(2006.01)

(52) **U.S. Cl.**

CPC ***F02B 37/22*** (2013.01); ***F02B 37/24*** (2013.01); ***F02B 39/16*** (2013.01); ***F02D 41/145*** (2013.01); ***F02D 41/1448*** (2013.01); ***F02D 41/22*** (2013.01); ***F02M 25/0702*** (2013.01); ***F02M 25/0706*** (2013.01); ***F02M 25/077*** (2013.01); ***F02M 25/0753*** (2013.01); *F02D 2041/1433* (2013.01); *F02D 2250/34* (2013.01)

(58) **Field of Classification Search**

CPC F02B 39/16; F02B 37/22; F02M 26/07; F02M 26/10; F02M 26/49; F02M 26/04; F02M 26/45; F02M 26/52; F02D 41/00; F02D 41/0052; F02D 41/22; F02D 2041/1433

See application file for complete search history.

(56) **References Cited**

U.S. PATENT DOCUMENTS

7,593,828	B2	9/2009	Wang et al.	
8,109,091	B2	2/2012	Xiao et al.	
8,346,462	B2 *	1/2013	Nakamura	F02M 26/48 123/568.16

(Continued)

FOREIGN PATENT DOCUMENTS

EP 2309111 B1 4/2013

OTHER PUBLICATIONS

Kostrzewski, Thomas, "System and Method for Reducing Vane Sticking in a Variable Geometry Turbocharger," U.S. Appl. No. 14/249,122, filed Apr. 9, 2014, 31 pages.

Primary Examiner — Hieu T Vo

(74) *Attorney, Agent, or Firm* — Julia Voutyras; Alleman Hall McCoy Russell & Tuttle LLP

(57) **ABSTRACT**

A method for operating a vehicle system is described herein. The method includes indicating a variable geometry turbine degradation based on a comparison of a modeled set of turbine pressure values and a sensed set of turbine pressure values, each set of turbine pressure values including a pressure value upstream of the turbine and a pressure value downstream of the turbine and the variable geometry turbine positioned downstream of an engine cylinder.
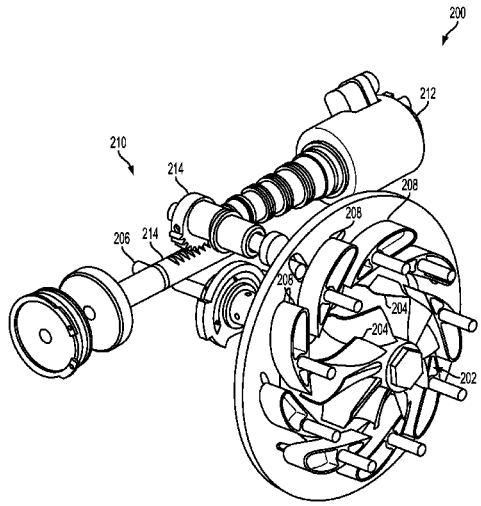
20 Claims, 7 Drawing Sheets