US007310375B2

(12) **United States Patent**
**Wang et al.**

(10) **Patent No.: US 7,310,375 B2**
(45) **Date of Patent: Dec. 18, 2007**

(54) **MACROBLOCK LEVEL ADAPTIVE FRAME/FIELD CODING FOR DIGITAL VIDEO CONTENT**

(75) Inventors: **Limin Wang**, San Diego, CA (US); **Rajeev Gandhi**, San Diego, CA (US); **Krit Panusopone**, San Diego, CA (US); **Ajay Luthra**, San Diego, CA (US)

(73) Assignee: **General Instrument Corporation**, Horsham, PA (US)

( * ) Notice: Subject to any disclaimer, the term of this patent is extended or adjusted under 35 U.S.C. 154(b) by 520 days.

(21) Appl. No.: **11/027,626**

(22) Filed: **Dec. 30, 2004**

(65) **Prior Publication Data**

US 2005/0111550 A1 May 26, 2005

**Related U.S. Application Data**

(62) Division of application No. 10/301,290, filed on Nov. 20, 2002, now Pat. No. 6,980,596.

(60) Provisional application No. 60/395,734, filed on Jul. 12, 2002, provisional application No. 60/333,921, filed on Nov. 27, 2001, provisional application No. 60/398,161, filed on Jul. 23, 2002.

(51) **Int. Cl.**
***H04B 1/66*** (2006.01)

(52) **U.S. Cl.** ..... **375/240.16**; 375/240.24; 375/240.25; 375/240.13; 375/240.02; 375/240.26; 382/238; 382/233; 382/236; 382/235; 382/239

(58) **Field of Classification Search** ..... 375/240.16, 375/240.24, 240.25, 240.13, 240.02, 240.26; 382/238, 233, 236, 235, 239
See application file for complete search history.

(56) **References Cited**

U.S. PATENT DOCUMENTS

| | | | | |
|---|---|---|---|---|
| 4,437,119 | A | 3/1984 | Matsumoto et al. | |
| 5,412,428 | A | 5/1995 | Tahara | |
| 5,504,530 | A * | 4/1996 | Obikane et al. | 375/240.14 |
| 5,801,778 | A | 9/1998 | Ju | |
| 6,094,225 | A | 7/2000 | Han | |
| 6,192,148 | B1 | 2/2001 | Lin | |
| 6,404,813 | B1 | 6/2002 | Haskell et al. | |

OTHER PUBLICATIONS

P. Borgwardt: "Core Experiment on Interlaced Video Coding VCEG-N85" ITU-Telecommunications Standardization Sector ITU-T Q.6/SG16 Video Coding Expert Group (VCEG) Sep. 24-27, 2001, pp. 1-10, XP002257037 Santa Barbara, CA USA.

(Continued)

*Primary Examiner*—Shawn S. An
(74) *Attorney, Agent, or Firm*—Larry T. Cullen

(57) **ABSTRACT**

A method and system of encoding and decoding digital video content. The digital video content comprises a stream of pictures which can each be intra, predicted, or bi-predicted pictures. Each of the pictures comprises macroblocks that can be further divided into smaller blocks. The method entails encoding and decoding each of the smaller blocks in each picture in said stream of pictures in either frame mode or in field mode.
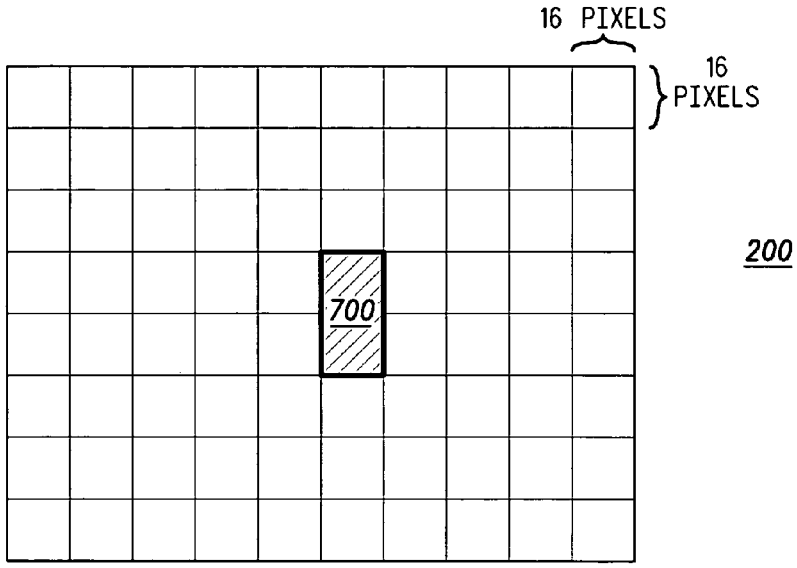
**18 Claims, 8 Drawing Sheets**