US006409675B1

(12) **United States Patent**
Turcott

(10) **Patent No.: US 6,409,675 B1**
(45) **Date of Patent: Jun. 25, 2002**

(54) **EXTRAVASCULAR HEMODYNAMIC MONITOR**

(75) Inventor: **Robert Turcott**, Menlo Park, CA (US)

(73) Assignee: **Pacesetter, Inc.**, Sunnyvale, CA (US)

(*) Notice: Subject to any disclaimer, the term of this patent is extended or adjusted under 35 U.S.C. 154(b) by 0 days.

(21) Appl. No.: **09/438,017**

(22) Filed: **Nov. 10, 1999**

(51) **Int. Cl.**[7] **A61B 5/04**

(52) **U.S. Cl.** **600/508**; 600/504; 600/586; 600/528; 600/526; 600/527

(58) **Field of Search** 600/480, 481, 600/486, 504, 586, 489, 508, 526–528

(56) **References Cited**

U.S. PATENT DOCUMENTS

4,815,469	A		3/1989	Cohen et al.	128/634
4,915,113	A	*	4/1990	Holman	128/691
5,040,533	A		8/1991	Fearnot	128/419 PG
5,040,538	A		8/1991	Mortazavi	128/633
5,113,869	A		5/1992	Nappholz et al.	128/696
5,342,408	A		8/1994	DeCoriolis et al.	607/32
5,365,932	A	*	11/1994	Greenhut	128/696
5,368,040	A		11/1994	Carney	128/700
5,404,877	A		4/1995	Nolan et al.	128/671
5,411,031	A		5/1995	Yomtov	128/706
5,454,838	A		10/1995	Vallana	607/19
5,496,351	A		3/1996	Plicchi et al.	607/17
5,511,553	A		4/1996	Segalowitz	128/696
5,518,001	A		5/1996	Snell	128/697
5,544,661	A		8/1996	Davis et al.	128/700
5,556,421	A		9/1996	Prutchi et al.	607/36
5,720,770	A		2/1998	Nappholz et al.	607/30
5,743,268	A		4/1998	Kabal	128/691
5,788,643	A		8/1998	Feldman	600/506
5,791,344	A		8/1998	Schulman et al.	128/635
5,792,197	A		8/1998	Nappholz	607/17
5,836,889	A		11/1998	Wyborny et al.	600/509
5,904,708	A		5/1999	Goedeke	607/18
5,935,081	A		8/1999	Kadhiresan	600/513
6,045,513	A	*	4/2000	Stone et al.	600/508
6,077,227	A	*	6/2000	Miesel et al.	600/486
6,264,611	B1	*	7/2001	Ishikawa et al.	600/486
6,312,378	B1		11/2001	Bardy	600/300

OTHER PUBLICATIONS

Medtronic Investor Information; Press Release "Medtronic Announces Two Major Milestones in its Effort to Treat Patients with Heart Failure"; Jun. 16, 1999; pp. 1–3.

Medtronic Reveal—A New Tool—Sycope and Fainting; New Diagnostic Tool; Jun. 16, 1999; pp. 1–3.

* cited by examiner

Primary Examiner—Carl Layno
(74) *Attorney, Agent, or Firm*—Steven M. Mitchell

(57) **ABSTRACT**

A method and apparatus for monitoring the hemodynamic status of a patient is provided. It comprises an implantable monitor with one or a plurality of sensors configured for extravascular placement, electronic circuitry that is coupled to the sensors and processes their output, a transmitter/receiver for conveying information between the monitor and an external unit, and a patient alert which notifies the patient if medical attention should be sought. The extravascular sensors include vascular plethysmography, heart and lung sounds, thoracic impedance, and ECG. In the preferred embodiment, the radio frequency transmitter/receiver provides for the automatic telemetry of data, without requiring the active participation of the patient or clinician. Thus data can be conveyed routinely and automatically, allowing more computationally demanding analysis to be done by an external device, or allowing human review at a central location. The monitor is particularly applicable to patients with heart failure.
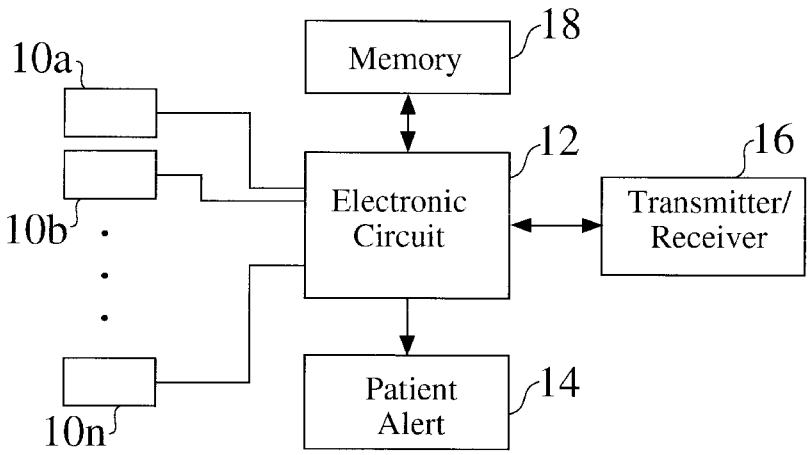
27 Claims, 21 Drawing Sheets