US005107175A

United States Patent [19]

Hirano et al.

[11] Patent Number: 5,107,175

[45] Date of Patent: Apr. 21, 1992

[54] MOISTURE TRAPPING FILM FOR EL LAMPS OF THE ORGANIC DISPERSION TYPE

[75] Inventors: **Hisakazu Hirano**, Takatsuki; **Kiju Mori**, Machida; **Junichi Watanabe**; **Fumio Kondo**, both of Yokohama, all of Japan

[73] Assignees: **Sumitomo Bakelite Company Limited**; **Stanley Electric Co., Ltd.**, both of Tokyo, Japan

[21] Appl. No.: **541,688**

[22] Filed: **Jun. 21, 1990**

[30] **Foreign Application Priority Data**

Jun. 27, 1989 [JP] Japan 1-162763

[51] **Int. Cl.**[5] **H05B 33/04**

[52] **U.S. Cl.** **313/512**; 428/690; 428/917

[58] **Field of Search** 313/512; 428/690, 917

[56] **References Cited**

U.S. PATENT DOCUMENTS

3,110,837 11/1963 Wollentin .
3,281,619 10/1966 Greene ..... 313/512 X
4,593,228 6/1986 Albrechtson et al. ..... 313/512 X
4,687,968 8/1987 Frayer ..... 313/512 X

FOREIGN PATENT DOCUMENTS

0374050 12/1989 European Pat. Off. .
1309655 1/1962 France .
0350907 7/1989 Japan .

OTHER PUBLICATIONS

Database Derwent World Patent Index, AN 88-297217, Derwent Publications Ltd., London, GB; & JP-A-63 218 351 (Sumitomo) Sep. 10, 1988/Abstract.
Database Derwent World Patent Index, AN 88-304646, Derwent Publications Ltd., London, GB; & JP-A-63 224 944 (Sumitomo) Sep. 20, 1988/Abstract.
Database Derwent World Patent Index, AN 89-169563, Derwent Publications Ltd., London, GB; & JP-A-1 110-955 (Daicel) Apr. 27, 1989/Abstract.

Primary Examiner—Palmer C. DeMeo
Attorney, Agent, or Firm—Browdy and Neimark

[57] **ABSTRACT**

A moisture trapping film for EL lamps of the organic dispersion type wherein a colorless, transparent adhesive layer having tackiness at room temperature is provided on one side or both sides of a colorless, transparent water-absorbing film.
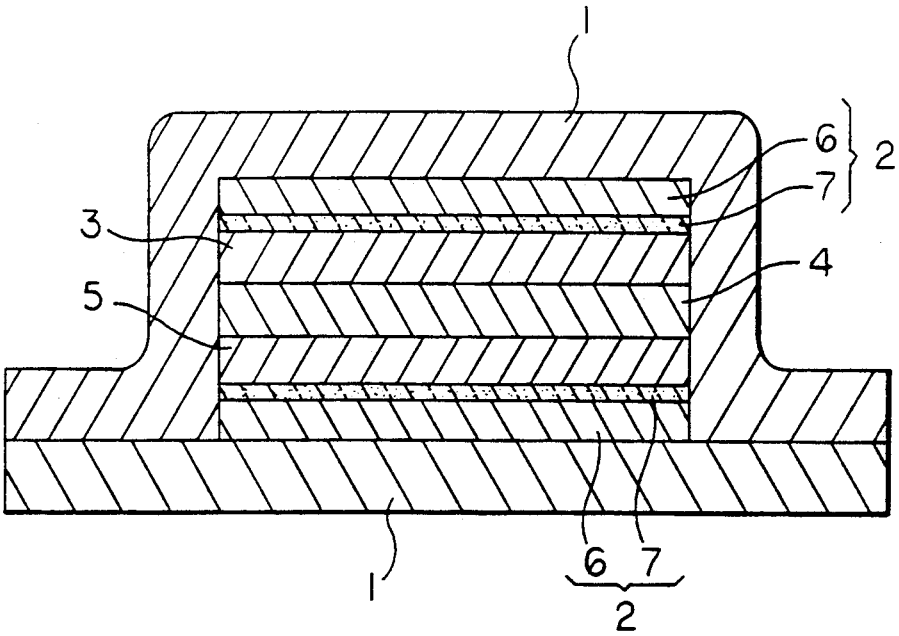
7 Claims, 2 Drawing Sheets