US006600175B1

(12) **United States Patent**
Baretz et al.

(10) **Patent No.: US 6,600,175 B1**
(45) **Date of Patent: *Jul. 29, 2003**

(54) **SOLID STATE WHITE LIGHT EMITTER AND DISPLAY USING SAME**

(75) Inventors: **Bruce Baretz**, West Milford, NJ (US); **Michael A. Tischler**, Danbury, CT (US)

(73) Assignee: **Advanced Technology Materials, Inc.**, Danbury, CT (US)

(*) Notice: This patent issued on a continued prosecution application filed under 37 CFR 1.53(d), and is subject to the twenty year patent term provisions of 35 U.S.C. 154(a)(2).

Subject to any disclaimer, the term of this patent is extended or adjusted under 35 U.S.C. 154(b) by 1212 days.

(21) Appl. No.: **08/621,937**

(22) Filed: **Mar. 26, 1996**

(51) **Int. Cl.**[7] **H01L 33/00**

(52) **U.S. Cl.** **257/100**; 257/88; 257/98; 257/99

(58) **Field of Search** 257/88, 98, 99, 257/100

(56) **References Cited**

U.S. PATENT DOCUMENTS

3,593,055	A	*	7/1971	Geusic	257/98
3,763,405	A	*	10/1973	Mitsuhata	257/98
3,932,881	A	*	1/1976	Mita	257/98
4,992,704	A		2/1991	Stinson	315/312
5,126,214	A	*	6/1992	Tokailin	257/99
5,208,462	A	*	5/1993	O'Conner	257/98
5,405,709	A		4/1995	Littman et al.	428/690
5,583,349	A	*	12/1996	Norman	257/88
5,660,461	A	*	8/1997	Ignatius	257/88

FOREIGN PATENT DOCUMENTS

JP	60170194	9/1985	
JP	04289691	10/1992	
JP	5-152609	* 6/1993	257/98

OTHER PUBLICATIONS

Sato, Y. et al, "Full–Color Fluorescent Display Devices Using a Near–UV Light Emitting Diode", *Jpn. J. Appl. Phys.* vol. 35 (1996) pp. L 838–L839.

J.I. Pankove and E.R. Levin, "Scanning Electron Microscopy Studies of GaN" J. Appl. Phys. vol. 46, (1975), pp. 1647–1652.

I. Akasaki, et al., "Photoluminescence of Mg–doped p–type GaN and Electroluminescence of GaN p–n Junction LED" *J. Lumion.*, vol. 48–49, (1991) pp. 666–670.

H. Amano et al., UV and Blue Electroluminescence from Al.GaN:Mg/GaN LED treated eith Low–Energy Electron Beam Irradiation (LEEBI), *Inst. Phys. Conf. Ser.* vol. 106, (1990), pp. 725–730.

Munch et al, "Silicon Carbide Light–Emitting Diodes with Epitaxial Junctions" *Solid State Electronics*, vol. 19, (1976) p. 871.

Zhang Jin Chao et al., White Light Emitting Glasses, Journal of Solid State Chemistry, 93, 17–29 (1991), pp. 17–29.

(List continued on next page.)

Primary Examiner—Jerome Jackson
(74) *Attorney, Agent, or Firm*—Steven J. Hultquist; Margaret Chappuis

(57) **ABSTRACT**

A light emitting assembly comprising a solid state device coupleable with a power supply constructed and arranged to power the solid state device to emit from the solid state device a first, relatively shorter wavelength radiation, and a down-converting luminophoric medium arranged in receiving relationship to said first, relatively shorter wavelength radiation, and which in exposure to said first, relatively shorter wavelength radiation, is excited to responsively emit second, relatively longer wavelength radiation. In a specific embodiment, monochromatic blue or UV light output from a light-emitting diode is down-converted to white light by packaging the diode with fluorescent organic and/or inorganic fluorescers and phosphors in a polymeric matrix.
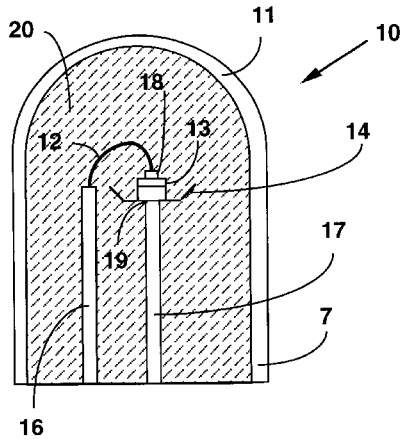
26 Claims, 3 Drawing Sheets