US005296974A

United States Patent [19]

Tada et al.

[11] Patent Number: 5,296,974

[45] Date of Patent: Mar. 22, 1994

[54] LIGHT CONTROLLING DEVICE AND PROCESS FOR CONTROLLING LIGHT TRANSMISSION

[75] Inventors: **Hiroaki Tada**, Kobe; **Yasuhiro Saito**, Nishinomiya; **Masahiro Hirata**, Takatsuki; **Masato Hyodo**, Kobe; **Hideo Kawahara**, Kawanishi, all of Japan

[73] Assignee: **Nippon Sheet Glass Co., Ltd.**, Osaka, Japan

[21] Appl. No.: **913,173**

[22] Filed: **Jul. 14, 1992**

[30] **Foreign Application Priority Data**

Jul. 16, 1991 [JP] Japan 3-175567

[51] **Int. Cl.**[5] **G02B 5/22**

[52] **U.S. Cl.** **359/885**; 359/228; 359/601; 359/267; 359/296; 428/323

[58] **Field of Search** 359/885, 886, 227, 228, 359/229, 230, 45, 46, 47, 51, 52, 84, 601, 613, 614, 265, 267, 270, 271, 296; 356/335, 336; 428/323, 324

[56] **References Cited**

U.S. PATENT DOCUMENTS

3,257,903	6/1966	Marks	88/61
3,612,657	10/1971	Sawyer	359/296
4,093,534	6/1978	Carter et al.	359/296
4,345,820	8/1982	Chabrolle	359/296
4,394,068	7/1983	Pape et al.	359/267
4,442,019	4/1984	Marks	359/296
4,627,689	12/1986	Asher	359/886
4,657,349	4/1987	Labes et al.	359/296
4,671,617	6/1987	Hara	359/267
5,007,714	4/1991	Nishimura et al.	359/228
5,131,736	7/1992	Alvarez	359/886
5,147,716	9/1992	Bellus	428/323

Primary Examiner—Loha Ben

Attorney, Agent, or Firm—Varndell Legal Group

[57] **ABSTRACT**

A light controlling device comprising a pair of substrates, a viscoelastic or elastic dispersing medium containing fine particles aligned in an approximately constant direction, and a way for applying a shear stress to the viscoelastic or elastic material. The device can control light transmission in non-stage by applying a shear stress to the viscoelastic or elastic material to incline the direction of the alignment of particles with respect to the incident light.
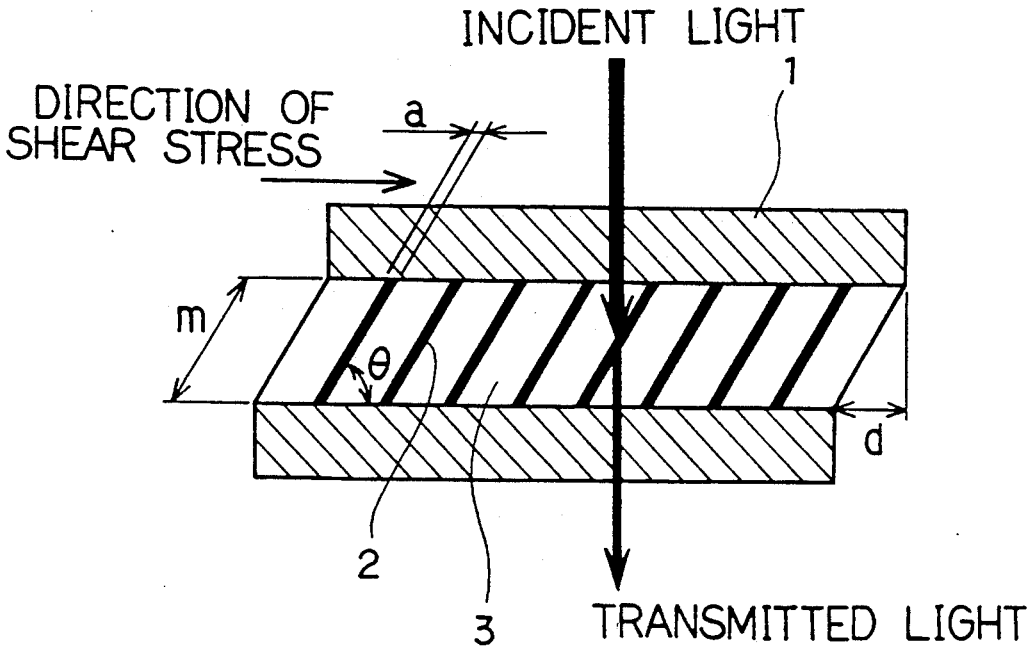
20 Claims, 5 Drawing Sheets