US009084674B2

(12) **United States Patent**
Brady et al.

(10) **Patent No.: US 9,084,674 B2**
(45) **Date of Patent: Jul. 21, 2015**

(54) **INTRAOCULAR LENS WITH SHAPE CHANGING CAPABILITY TO PROVIDE ENHANCED ACCOMODATION AND VISUAL ACUITY**

(75) Inventors: **Daniel G. Brady**, San Juan Capistrano, CA (US); **Huawei Zhao**, Irvine, CA (US); **Edward Geraghty**, Rancho Santa Margarita, CA (US); **Scott J. Catlin**, Orange, CA (US)

(73) Assignee: **Abbott Medical Optics Inc.**, Santa Ana, CA (US)

(*) Notice: Subject to any disclaimer, the term of this patent is extended or adjusted under 35 U.S.C. 154(b) by 199 days.

(21) Appl. No.: **13/462,114**

(22) Filed: **May 2, 2012**

(65) **Prior Publication Data**

US 2013/0297018 A1 Nov. 7, 2013

(51) **Int. Cl.**
A61F 2/16 (2006.01)

(52) **U.S. Cl.**
CPC ***A61F 2/1635*** (2013.01); ***A61F 2/1624*** (2013.01); *A61F 2/1618* (2013.01); *A61F 2002/1681* (2013.01); *A61F 2002/1689* (2013.01); *A61F 2250/0018* (2013.01)

(58) **Field of Classification Search**
CPC A61F 2/16; A61F 2/1613; A61F 2/1618; A61F 2/1624; A61F 2/1635; A61F 2/1648; A61F 2/1681; A61F 2250/0053
USPC 623/6.24, 6.27–6.29, 6.37, 6.39–6.4, 623/6.46, 6.49, 6.33
See application file for complete search history.

(56) **References Cited**

U.S. PATENT DOCUMENTS

4,361,913	A	12/1982	Streck
4,370,760	A	2/1983	Kelman
4,373,218	A	2/1983	Schachar
4,442,553	A	4/1984	Hessburg
4,512,040	A	4/1985	McClure
4,560,383	A	12/1985	Leiske
4,562,600	A	1/1986	Ginsberg et al.
4,615,701	A	10/1986	Woods
4,641,934	A	2/1987	Freeman
4,731,078	A	3/1988	Stoy et al.
4,769,035	A	9/1988	Kelman
4,813,955	A	3/1989	Achatz et al.
4,842,601	A	6/1989	Smith

(Continued)

FOREIGN PATENT DOCUMENTS

CH	681687	A5	5/1993
EP	766540	A1	4/1997

(Continued)

OTHER PUBLICATIONS

International Search Report and Written Opinion for Application No. PCT/US2013/039302, mailed on Jul. 26, 2013, 9 pages.

(Continued)

Primary Examiner — Howie Matthews
(74) *Attorney, Agent, or Firm* — Abbott Medical Optics Inc.

(57) **ABSTRACT**

An intraocular lens for providing a range of accommodative vision, an extended depth of focus, or enhanced performance through the asymmetric transfer of ocular forces to the lens. The intraocular lens contains an optic and a haptic. The shape and/or material of the haptic results in the transmission of ocular forces to particular regions in the optic. Greater forces applied to particular regions result in deformation of that region and increased power.
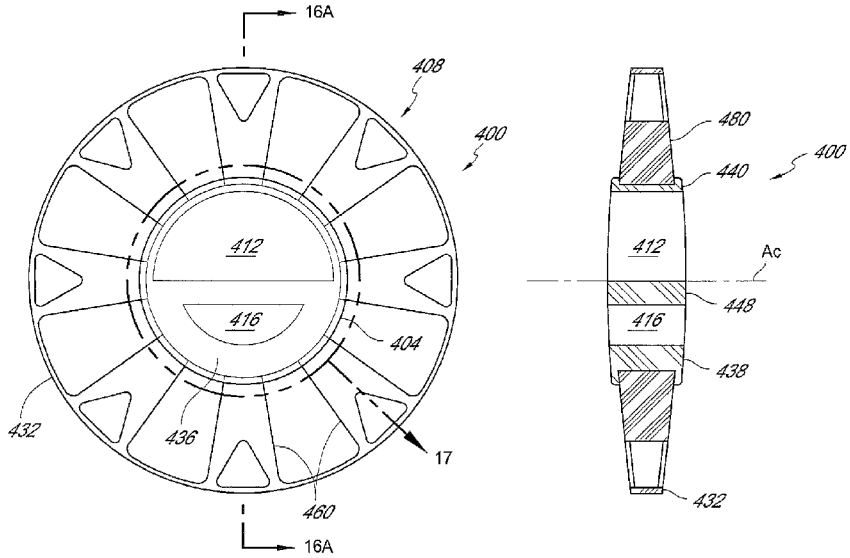
10 Claims, 17 Drawing Sheets