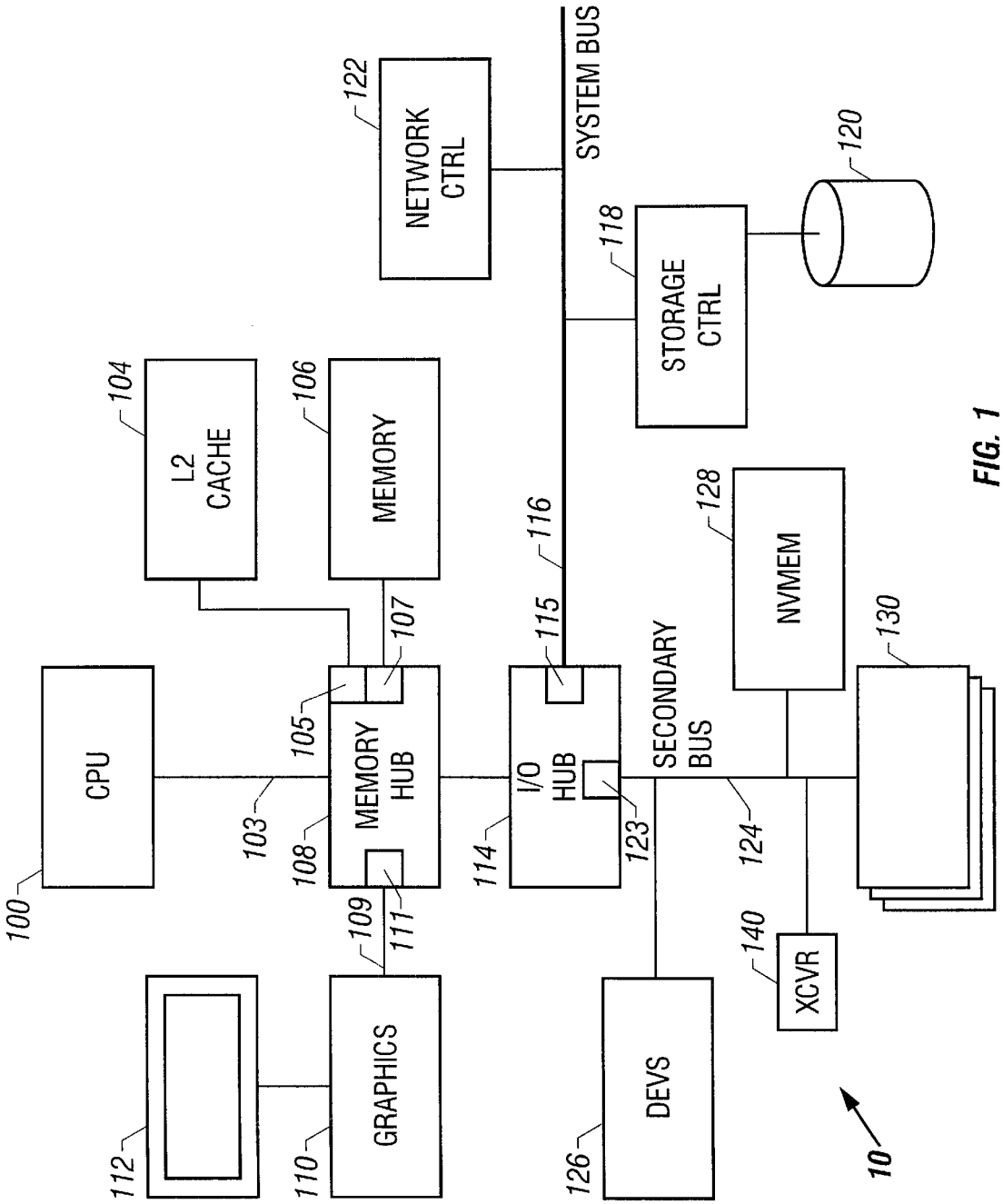
CPU
100
L2 CACHE
104
MEMORY
106
103
105
107
MEMORY HUB
108
109
111
GRAPHICS
110
112
NETWORK CTRL
122
SYSTEM BUS
116
115
I/O HUB
114
123
STORAGE CTRL
118
120
SECONDARY BUS
124
NVMEM
128
130
XCVR
140
DEVS
126
10

FIG. 1