US007755174B2

(12) **United States Patent**
Rollin et al.

(10) **Patent No.: US 7,755,174 B2**
(45) **Date of Patent: Jul. 13, 2010**

(54) **INTEGRATED ELECTRONIC COMPONENTS AND METHODS OF FORMATION THEREOF**

(75) Inventors: **Jean-Marc Rollin**, Blacksburg, VA (US); **David W. Scherrer**, Radford, VA (US)

(73) Assignee: **Nuvotonics, LLC**, Radford, VA (US)

(*) Notice: Subject to any disclaimer, the term of this patent is extended or adjusted under 35 U.S.C. 154(b) by 4 days.

(21) Appl. No.: **12/077,547**

(22) Filed: **Mar. 20, 2008**

(65) **Prior Publication Data**

US 2008/0240656 A1 Oct. 2, 2008

Related U.S. Application Data

(60) Provisional application No. 60/895,979, filed on Mar. 20, 2007.

(51) **Int. Cl.**
H01L 29/40 (2006.01)

(52) **U.S. Cl.** **257/664**; 333/243

(58) **Field of Classification Search** 257/664
See application file for complete search history.

(56) **References Cited**

U.S. PATENT DOCUMENTS

4,673,904	A	6/1987	Landis et al.	
5,990,768	A	11/1999	Takahashi et al.	
6,466,112	B1	10/2002	Kwon et al.	
7,012,489	B2	3/2006	Sherrer et al.	
7,148,772	B2 *	12/2006	Sherrer et al.	333/243
7,239,219	B2	7/2007	Brown et al.	
7,259,640	B2	8/2007	Brown et al.	
2002/0075104	A1	6/2002	Kwon et al.	
2003/0222738	A1	12/2003	Brown et al.	
2004/0263290	A1	12/2004	Sherrer et al.	

FOREIGN PATENT DOCUMENTS

CA	2055116	5/1992
EP	0 485 831	5/1992

OTHER PUBLICATIONS

European Search Report of corresponding European Patent Application No. 08 15 3144 mailed Jul. 2, 2008.

* cited by examiner

Primary Examiner—Thien F Tran
(74) *Attorney, Agent, or Firm*—Sherr & Vaughn, PLLC

(57) **ABSTRACT**

Provided are integrated electronic components which include a waveguide microstructure formed by a sequential build process and an electronic device, and methods of forming such integrated electronic components. The microstructures have particular applicability to devices for transmitting electromagnetic energy and other electronic signals.
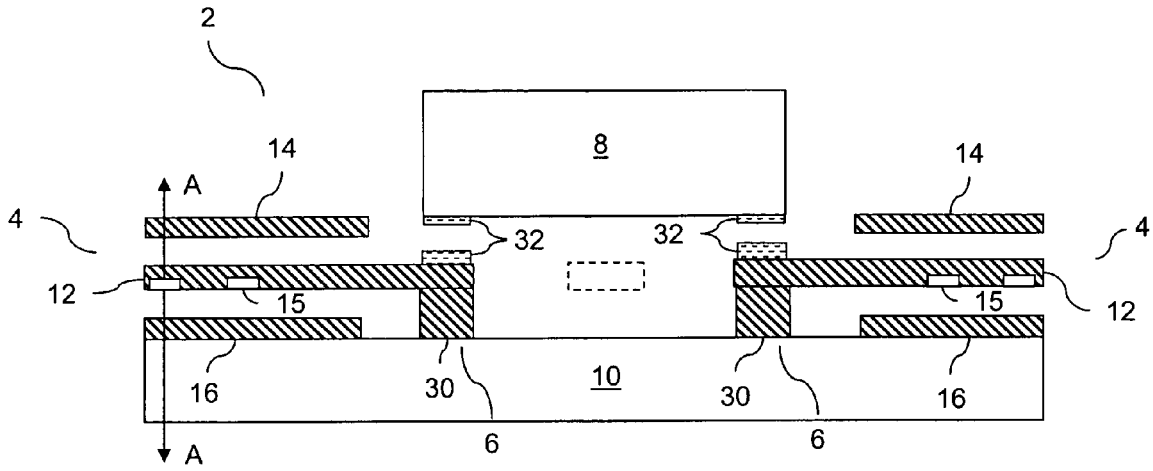
8 Claims, 8 Drawing Sheets