United States Patent [19]

Yoshida

[11] **Patent Number: 4,747,074**

[45] **Date of Patent: May 24, 1988**

[54] **DISPLAY CONTROLLER FOR DETECTING PREDETERMINED DRAWING COMMAND AMONG A PLURALITY OF DRAWING COMMANDS**

[76] Inventor: **Shigeaki Yoshida**, 3161-77, Irumagawa, Sayama-shi, Saitama, Japan

[21] Appl. No.: **6,963**

[22] Filed: **Jan. 27, 1987**

Related U.S. Application Data

[63] Continuation of Ser. No. 609,439, May 11, 1984, abandoned.

[30] **Foreign Application Priority Data**

May 13, 1983 [JP] Japan 58-82618

[51] **Int. Cl.**[4] **G06F 15/00**; G06F 3/14; G09G 1/14

[52] **U.S. Cl.** **364/900**; 364/518; 364/521; 340/747

[58] **Field of Search** ..... 364/200, 900 MS File, 364/518, 521; 340/724, 734, 747, 789; 382/10

[56] **References Cited**

U.S. PATENT DOCUMENTS

4,100,532	7/1978	Farnbach	382/1
4,146,925	3/1979	Green et al.	364/521
4,384,286	5/1983	Di Toro	364/521 X
4,388,620	6/1983	Sherman	364/521 X
4,412,296	10/1983	Taylor	364/521
4,475,237	10/1984	Glasby	371/67 X
4,479,192	10/1984	Yamagami	364/521 X
4,509,044	4/1985	Yachida	340/789
4,536,856	8/1985	Hiroishi	364/900
4,538,144	8/1985	Yamagami	340/747
4,703,317	10/1987	Shiomi et al.	340/747 X

FOREIGN PATENT DOCUMENTS

56-35252	4/1981	Japan	371/19
57-203127	12/1982	Japan .	

Primary Examiner—Raulfe B. Zache
Assistant Examiner—Thomas C. Lee
Attorney, Agent, or Firm—Antonelli, Terry & Wands

[57] **ABSTRACT**

The display controller has a drawing processor for forming an address signal and a data signal to be supplied to a refreshing memory by processing a drawing command supplied thereto, and a digital comparator for comparing an address signal outputted from the drawing processor with an address signal set beforehand. An output of the digital comparator is utilized for referring to the drawing command to be processed. Thus the drawing command which produces a particular one of a plurality of graphic patterns forming a display on a display device can be extracted easily.
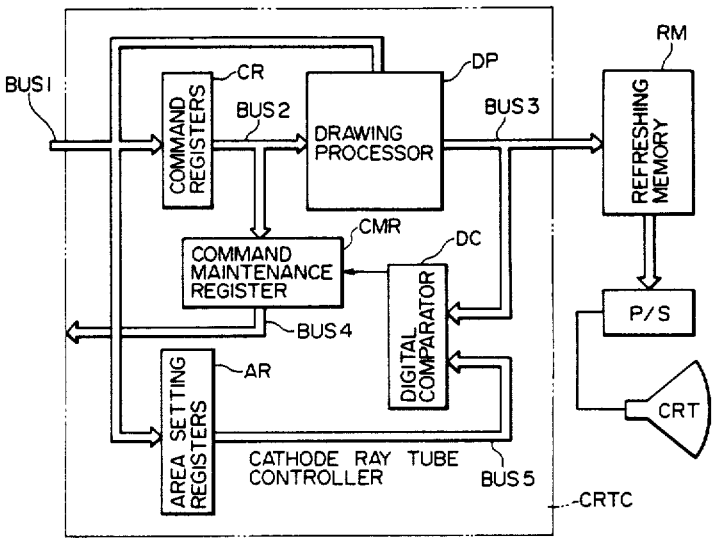
9 Claims, 1 Drawing Sheet