US005944574A

# United States Patent [19]

**Small et al.**

[11] **Patent Number: 5,944,574**

[45] **Date of Patent: *Aug. 31, 1999**

[54] **INTERACTIVE AUDIO-VISUAL TOY**

[75] Inventors: **David Small**, San Jose; **Paul S. Rago**, Alamo; **Brian Farley**, Danville, all of Calif.

[73] Assignee: **Shoot the Moon Products, Inc.**, Pleasanton, Calif.

[ * ] Notice: This patent issued on a continued prosecution application filed under 37 CFR 1.53(d), and is subject to the twenty year patent term provisions of 35 U.S.C. 154(a)(2).

[21] Appl. No.: **08/682,266**

[22] Filed: **Jul. 17, 1996**

[51] **Int. Cl.**[6] ..... **G09B 5/06**

[52] **U.S. Cl.** ..... **446/149**; 446/408; 434/311

[58] **Field of Search** ..... 446/147, 149, 446/151, 408; 434/308, 309, 311

[56] **References Cited**

U.S. PATENT DOCUMENTS

| | | | |
|---|---|---|---|
| D. 315,178 | 3/1991 | Takahashi et al. | D21/64 |
| 1,269,968 | 6/1918 | Small . | |
| 1,821,184 | 9/1931 | Langos . | |
| 1,831,817 | 11/1931 | McGill et al. . | |
| 2,003,765 | 6/1935 | Widen . | |
| 2,064,115 | 12/1936 | Holsman . | |
| 2,102,243 | 12/1937 | Van Deventer et al. . | |
| 2,608,778 | 9/1952 | O'Gorman . | |
| 3,029,683 | 4/1962 | Zaromb | 434/309 |
| 3,114,216 | 12/1963 | Crawford et al. . | |
| 3,319,357 | 5/1967 | Shreck et al. | 434/308 |
| 3,388,499 | 6/1968 | Mercorelli . | |
| 3,458,950 | 8/1969 | Tomaro . | |
| 3,590,525 | 7/1971 | Tomaro . | |
| 3,882,620 | 5/1975 | Grindle . | |
| 3,884,565 | 5/1975 | Tanno | 434/308 |
| 3,939,579 | 2/1976 | Andrews et al. . | |
| 4,079,431 | 3/1978 | Marut | 434/308 |
| 4,215,511 | 8/1980 | Todokoro . | |
| 4,373,918 | 2/1983 | Berman | 434/307 |
| 4,555,859 | 12/1985 | Corso | 434/308 |
| 4,637,007 | 1/1987 | Sakurai | 446/297 |
| 4,639,225 | 1/1987 | Washizuka | 434/308 |
| 4,668,060 | 5/1987 | Jones et al. | 353/15 |
| 4,684,349 | 8/1987 | Ferguson et al. | 434/308 |
| 4,855,725 | 8/1989 | Fernandez | 434/308 |
| 5,032,099 | 7/1991 | Chan . | |
| 5,065,345 | 11/1991 | Knowles et al. | 434/308 |
| 5,145,447 | 9/1992 | Goldfarb | 446/408 |
| 5,233,333 | 8/1993 | Borsuk | 434/317 |
| 5,236,364 | 8/1993 | Caparosa | 434/308 |
| 5,266,980 | 11/1993 | Gussin et al. | 353/19 |
| 5,310,377 | 5/1994 | Joja | 446/397 |
| 5,413,486 | 5/1995 | Burrows et al. | 434/308 |
| 5,474,457 | 12/1995 | Bromley | 434/311 |

FOREIGN PATENT DOCUMENTS

| | | | |
|---|---|---|---|
| 2573905 | 5/1986 | France | 434/308 |
| 993970 | 6/1965 | United Kingdom | 434/309 |
| 1100606 | 1/1968 | United Kingdom | 434/308 |

*Primary Examiner*—Robert A. Hafer
*Assistant Examiner*—Jeffrey D. Carlson
*Attorney, Agent, or Firm*—Blakely, Sokoloff, Taylor & Zafman LLP

[57] **ABSTRACT**

An interactive audio-visual toy that includes a base unit that receives removable audio-visual ("AV") cassette. The AV cassette includes a pair of rollers on which a picture scroll is wound. The pictorial scenes of the picture scroll are evident through a transparent viewing window. Moreover, a pre-recorded audio cassette is mounted on its bottom surface. The base unit controls the AV cassette to successively display these pictorial scenes without the use of expensive display hardware and to output audio from the pre-recorded audio cassette tape.
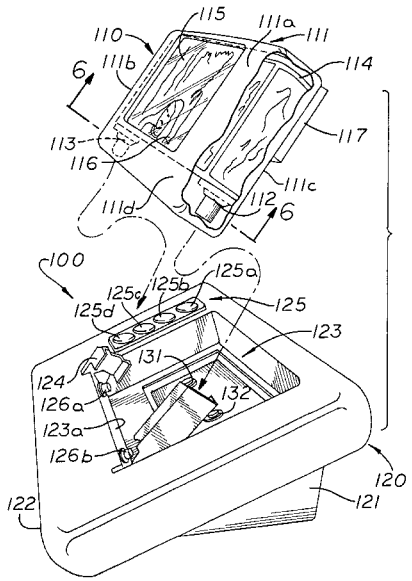
**29 Claims, 4 Drawing Sheets**