US009636674B2

(12) **United States Patent**
Patel et al.

(10) **Patent No.: US 9,636,674 B2**
(45) **Date of Patent: May 2, 2017**

(54) **MICROFLUIDIC CHIPS WITH OPTICALLY TRANSPARENT GLUE COATING AND A METHOD OF MANUFACTURING MICROFLUIDIC CHIPS WITH OPTICALLY TRANSPARENT GLUE COATING FOR A MICROFLUIDIC DEVICE**

(71) Applicant: **FluxErgy, LLC**, Tustin, CA (US)

(72) Inventors: **Tej Patel**, Tustin, CA (US); **Ryan Revilla**, Tustin, CA (US); **Matthew D'Ooge**, Tustin, CA (US)

(73) Assignee: **FluxErgy, LLC**, Tustin, CA (US)

(*) Notice: Subject to any disclaimer, the term of this patent is extended or adjusted under 35 U.S.C. 154(b) by 0 days.

(21) Appl. No.: **14/934,794**

(22) Filed: **Nov. 6, 2015**

(65) **Prior Publication Data**

US 2016/0059233 A1 Mar. 3, 2016

Related U.S. Application Data

(63) Continuation of application No. 14/028,320, filed on Sep. 16, 2013, now Pat. No. 9,180,652.

(51) **Int. Cl.**
B32B 37/16 (2006.01)
B32B 38/08 (2006.01)
(Continued)

(52) **U.S. Cl.**
CPC ***B01L 3/502707*** (2013.01); ***B01L 3/5027*** (2013.01); ***B32B 37/16*** (2013.01); ***B32B 38/08*** (2013.01); ***B32B 38/10*** (2013.01); ***C12Q 1/6806*** (2013.01); ***G01N 21/0332*** (2013.01); ***G01N 21/05*** (2013.01); *B01L 3/50851* (2013.01); *B01L 3/50853* (2013.01); *B01L 7/525* (2013.01); *B01L 2200/027* (2013.01); *B01L 2200/028* (2013.01); *B01L 2200/0689* (2013.01); *B01L 2200/10* (2013.01); *B01L 2200/12* (2013.01); *B01L 2300/0654* (2013.01);
(Continued)

(58) **Field of Classification Search**
CPC B01L 2200/027; B01L 2200/10; B01L 2200/12; B01L 2300/0654; B01L 2300/0663; B01L 2300/0816; B01L 2300/0883; B01L 2300/0887; B01L 2300/12; B01L 2300/123; B01L 2300/168; B01L 2300/18
See application file for complete search history.

(56) **References Cited**

U.S. PATENT DOCUMENTS

2004/0156753 A1* 8/2004 Roitman B01J 19/0093 422/504
2005/0272142 A1* 12/2005 Horita B01L 3/502707 435/287.1
(Continued)

Primary Examiner — Jennifer Wecker
(74) *Attorney, Agent, or Firm* — K&L Gates LLP

(57) **ABSTRACT**

A microfluidic chip for a microfluidic system includes a PDMS substrate having a first thickness, at least one microfluidic pathway in the substrate, a coating along the microfluidic pathway, and a glass layer having a second thickness on the substrate and above the microfluidic pathway, wherein the coating contains an optically transparent material, and the first thickness is greater than the second thickness. The coating includes cyanoacrylates, an UV curable epoxy adhesive, a gel epoxy or epoxy under trade name of EPO-TEK OG175, MasterBond EP30LV-1 or Locite 0151.
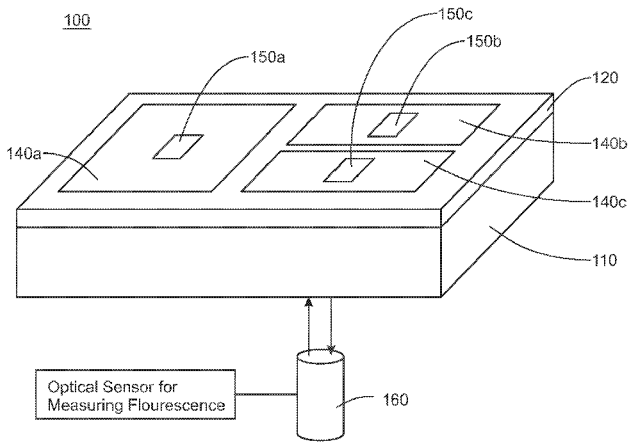
20 Claims, 6 Drawing Sheets