May 30, 1967 J. F. KING, JR 3,322,374

MAGNETOHYDRODYNAMIC PROPULSION APPARATUS

Filed Sept. 30, 1964 2 Sheets-Sheet 1

Fig. 1

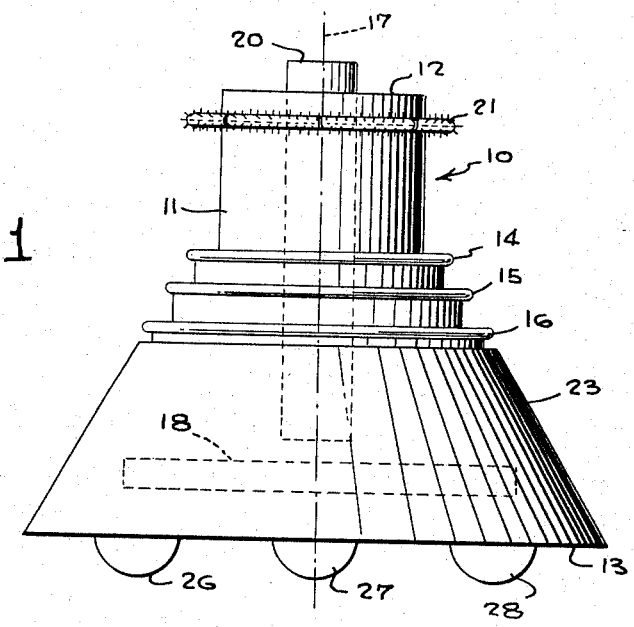

Fig. 2

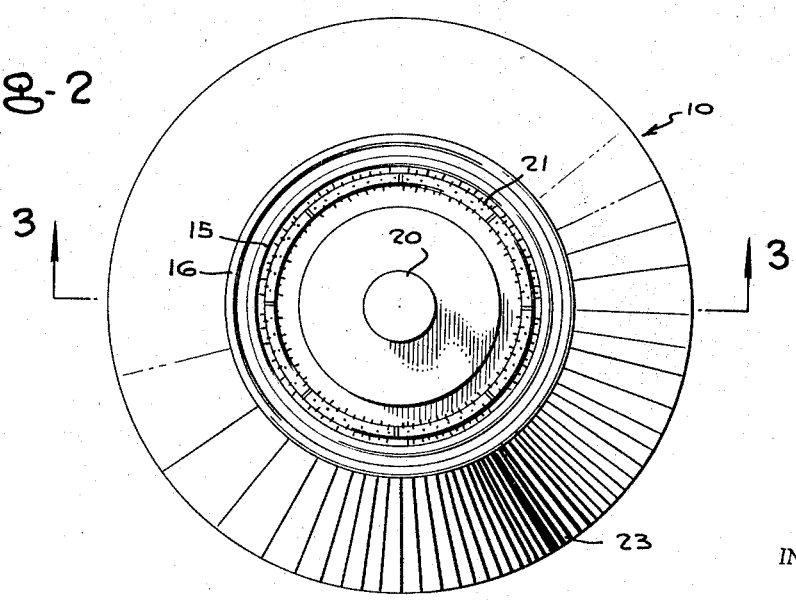

INVENTOR

JAMES F. KING, JR.

BY

Mason, Fenwick & Lawrence

ATTORNEYS